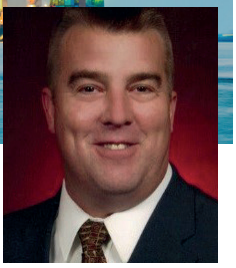

SOMETHING NEW FOR THE CRANE RETROFIT MARKET

AC OR DC MOTORS CONTROLLED BY THE SAME VARIABLE SPEED DRIVE

James Gabbard, Sales Manager Automated Crane Systems,
TMEIC, Virginia, USA

For decades, the ability to control motor speed (frequency), direction and torque was limited to DC motors. Industries of all types optimised processes for the power and control that DC voltage provided. Entire segments of industry were designed around these processes and they have served industry very well for years. We might say to ourselves, "why change?" or "what I have still works fine". With today's motivation and incentives for clean, efficient energy, modern industry requires more from each of us - more responsibility, more reliability, and more functionality; all on the same budget.

For years now, the development of Pulse Width Modulation (PWM) has made the ability to use AC power or Variable Frequency drives/motors commonplace on today's Container Crane or Yard RTG/RMG and Stacking Crane projects. A green, cost effective alternative is finally at our fingertips. Yet, not everyone is able to benefit or can justify the cost of making these, often, expensive upgrades. To replace DC Drives and Motors with AC can cost hundreds of thousands of dollars, causing smaller operations to choose not to upgrade or simply not to justify the investment.

TMEIC has developed a unique drive solution that can provide the benefits of Variable Frequency PWM while retaining use of installed DC motors. The product is called the TMdrive®-10e2-DP or Dual Purpose line of drives. With the TMdrive®-10e2-DP, TMEIC has taken the best features of the proven AC Drive, the TM-10e2, and merged it with the functionality of the TM-10e2 DDC to produce a single drive that can control either an AC or a DC motor.

The TMdrive®-10e2-DP is intended for use in crane modernisation projects where the existing DC motors will be retained. It has the advantage of common hardware for both the AC and DC motors and an easy upgrade from DC to AC at a future date if desired.

HOW WE MAKE IT WORK

The standard AC drive, the TMdrive®-10e2 produces square wave voltage pulses of fixed height and variable width to produce an equivalent 3-phase waveform (Figure 1).

The square wave voltage pulses result in a sinusoidal appearing current while connected to a load (AC motor). The resulting current is not a pure sine wave, but an average of the pulse widths. The TM-10e2 has proven itself to be highly reliable with a modular, compact design.

Its simple configuration is a favourite for engineering and maintenance personnel, with a low cost of ownership. The TM-10e2 has proven itself a valuable and worthy investment for cost conscious partners around the globe. It is the perfect drive, upon which, to build a versatile multi-application platform.

The other half of this new AC/DC Drive utilises features from the TMdrive®-10e2-DDC. The same basic 10e2 converter circuit is used to provide energy to the DC main bus (Figure 2).

INTRODUCING THE TMDRIVE®-10E2-DP

The TMdrive®-10e2-DP builds upon the DDC concept of using the basic 10e2 inverter circuit to power two different outputs. The DC motor armature is powered by two of the three 10e2 inverter phases with full four quadrant operation; that is, all combinations of motor volts and amps. The DC motor field is supplied by one IGBT of the remaining 10e2 phase (Figure 3).

The DC Motor Field Protection, indicated by the dotted boxes below, are the same safe guards used in TMEIC DC drives, plus a filter. This protection is critical because DC motor fields are highly inductive, and an open field circuit will cause an unloaded DC motor to over speed and self-destruct.

The DC motor magnetic structure can cause a DC current to circulate when powered by a DC generator or Thyristor Power Supply (TPS). The IGBTs used in the 10e2 inverter power circuits have gate blocking as a standard safety feature, which means they will not pass current unless commanded to do so by the control. The Motor Contactor applied in the existing DC motor circuit is not required but may be retained to keep the same look and feel for the operating personnel.

All features impacting the armature circuit are indicated in the dotted box as DC Motor Armature Protection (Figure 3 above). The TMdrive®-10e2-DP uses firmware to control the DC motor field and armature features. This firmware is easily replaced with the standard 10e2 firmware should the DC motor be replaced by an AC motor.

The TMdrive®-10e2-DP is integrated into the drive line-up with the 10e2 inverters, but additional equipment is required for the DC motor application. This means that the drive line-up order can match the physical mechanical system arrangement. The drive line-up is simplified by keeping all vital components in a single space where AC and DC drives can be aligned side-by-side.

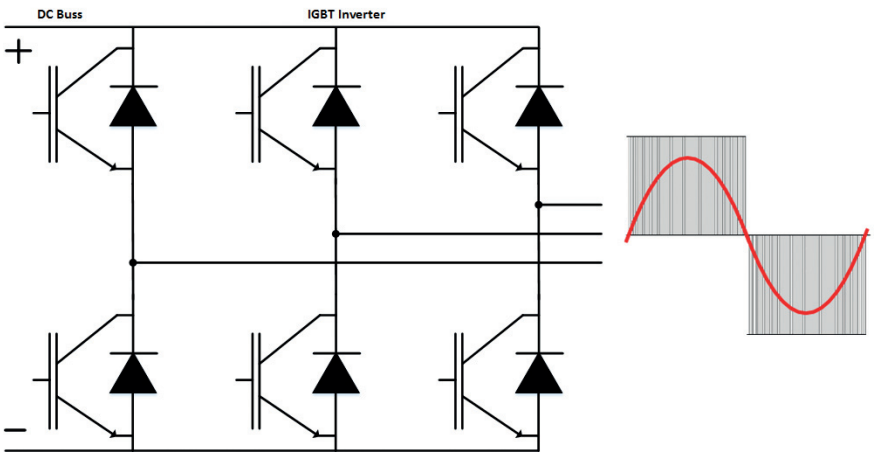

Figure 1: TMdrive®-10e2 Inverter Circuit

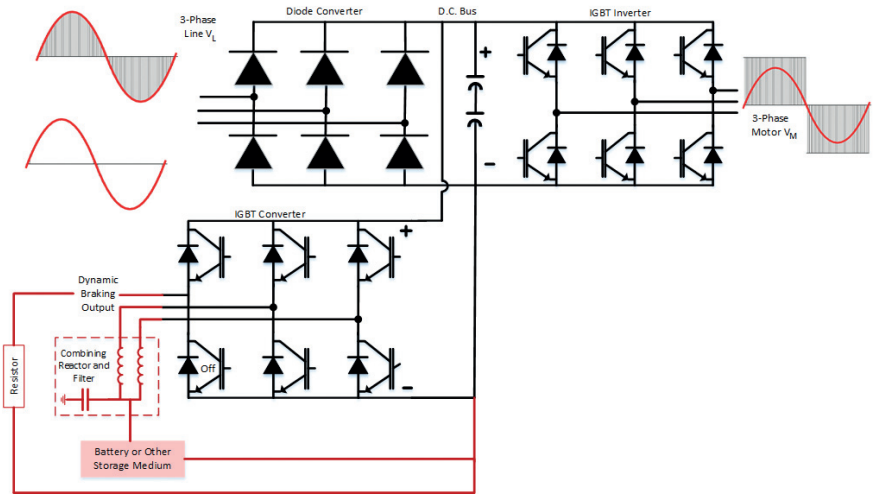

Figure 2: Details of Drive System with DDC Converter

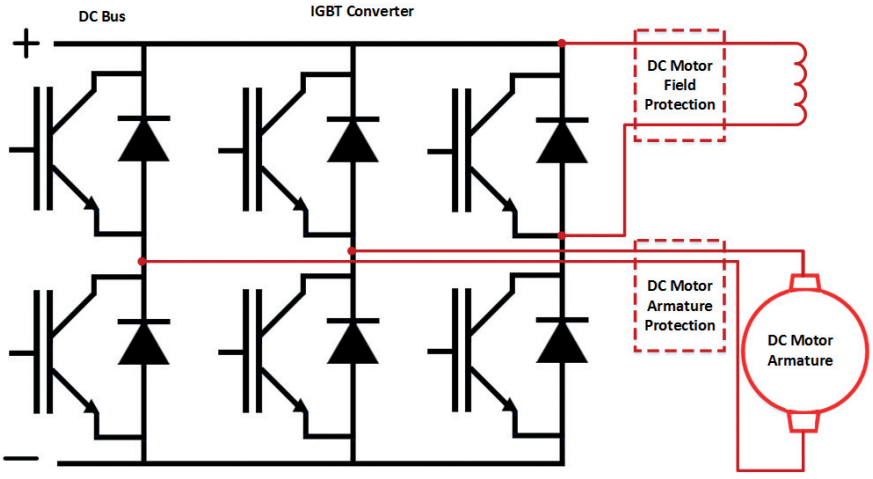

Figure 3: TMdrive®-10e2-DP Circuit

The TMdrive®-10e2-DP is flexible to specific needs with design options that can include dynamic braking or power regeneration and utilisation based on your specific configuration and needs. Dynamic Braking is used to remove regenerative energy from the DC Bus when the 10e2 inverters are stopping or lowering their connected loads.

Another option includes a DC Energy Storage device (such as a battery) or other storage medium that is charged by the 10e2 inverter phases during normal operation, and is discharged into the DC Bus when the converter cannot provide adequate power from the primary utility source (Figure 2).

The Dynamic Braking (Figure 2) circuit uses the remaining 10e2 inverter phase to transfer power from the DC Bus into a resistor when required. The resistor layout converts the dynamically generated electrical energy into heat that is dissipated to the air. The DDC uses appropriate firmware to control the DC Energy Storage and Dynamic Braking features. A DC Energy Storage output requires a filter since the battery does not have ability to mitigate the current spikes. The filter also uses its reactors to combine the outputs of the two inverter phases, maximizing available power. It is also possible to use a single inverter phase for low power applications.

There may be applications where the DC motor field voltage polarity must be rapidly reversed. This function is known as plugging and is not possible with the arrangement of Figure 4. In this situation a separate field exciter package may be applied.

A conventional TPS operates at a Power factor (PF) of between approximately 0 and 0.8 lagging. This means that the utility infrastructure must be designed with larger cables and transformers. The TMdrive®-P10e2 regenerative converter operates at 1.0 PF and the TMdrive®-10e2 non-regenerative converter at approximately 0.98 PF lagging, requiring a less robust utility infrastructure and lower utility costs.

The harmonic content of a conventional TPS is at fixed frequencies dominated by lower order components such as the 5th and 7th. As currents source power supplies, the actual harmonic currents are proportional to the output current; that is, they increase with motor load. The TMdrive®-10e2-DP functions in the same manner except at a much better PF.

The TMdrive®- P10e2-DP is a voltage source type which means the harmonic content is essentially constant regardless of motor load. In addition the harmonic content is spread over a larger range of frequencies, which generally means that they are of less concern. Fixed harmonic frequencies and power content allows for standard filters to be applied at the TMdrive®-P10e2-DP input if necessary for local conditions.

The Dual Purpose drive can be applied to power an AC motor when configured as shown in Figure 1, or a DC motor when configured as shown in Figure 3. The range and versatility of AC or DC motors will meet most commercial operational requirement on today's cranes.

TMEIC's TM10e2-DP has a proven functionality because it is built on a solid foundation of reliability and ease of use. The DP is a product that will serve several markets where the cost to replace existing equipment and upgrade is not immediately possible. The drive will serve a segment of the terminal market where incremental upgrades are required, but full replacement, for whatever reason, is not feasible or customers would simply like to keep their existing DC motors.

The TM-10e2-DP is another example of how TMEIC is working with customers to provide solutions that make sense. This technology is truly something new for the Crane Retrofit Market.

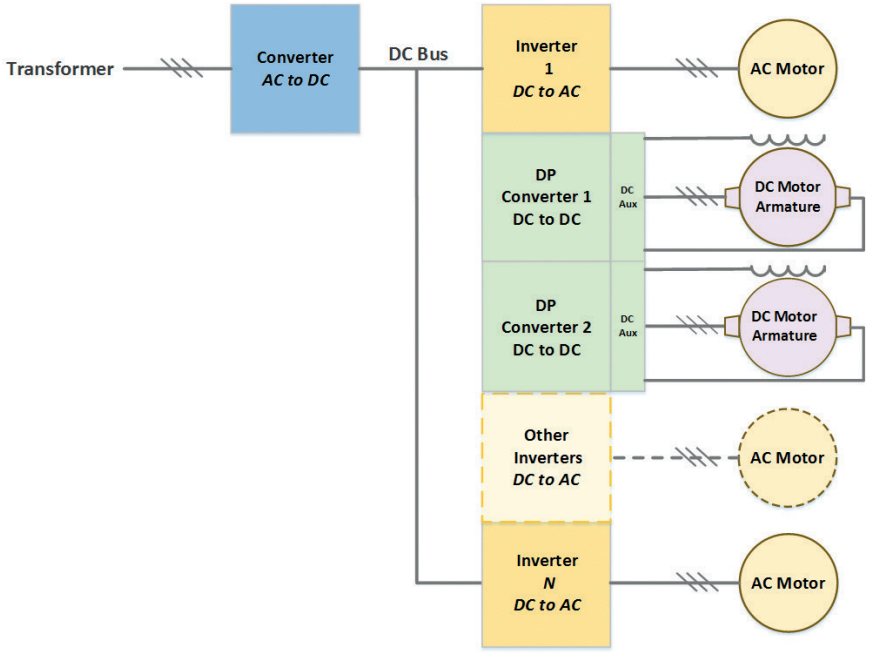

Figure 4: Overview of Drive System with AC and DC Motors

ABOUT THE AUTHOR

James Gabbard is a specialist in Crane Maintenance and Repair. With over twenty (20) years of direct experience in marine terminal operations. He has worked with organisations ranging from US Navy to APM Terminals and currently at TMEIC Corporation where he is a Sales Manager – Automated Crane Systems. He holds a BS in Electronics Engineering Technology.

ABOUT THE ORGANISATION

TMEIC Corporation a Globally recognized leader in Drives and Automation Systems with manufacturing, engineering, sales, support and service facilities around the world. TMEIC is a successful joint venture between Toshiba Corporation and Mitsubishi Electric. Industries include Steel, Mining, Pulp and Paper, Cement, Solar Power Inverters and Material Handling and General Industrial Systems.

ENQUIRIES

James Gabbard, Sales Manager
Automated Crane Systems

Tel: +1 (540) 521 0728
Email: james.gabbard@tmeic.com
www.tmeic.com