Fifty-Seventh Edition
www.porttechnology.org

PORT TECHNOLOGY INTERNATIONAL

NORTHEAST ASIA'S LOGISTICAL HUB

The Port of Busan in focus

ELECTRIFIED RTG SYSTEMS

Improving efficiency and reducing emissions

PIRACY AND PORTS

The knock-on effects and security concerns

WORLD PORTS & TRADE SUMMIT

Strategic Partner

ADPC
شركة أبوظبي للموانئ
ABU DHABI PORTS COMPANY

19-20 March 2013

St Regis Saadiyat Island Resort, Abu Dhabi

Hear from the industry's most influential minds and share knowledge with other attendees from around the world

www.worldportsandtrade.com

Follow us!

Join our group on Linkedin and receive not only the latest speaker announcements and industry news, but start meeting other attendees before you join us at the Summit.

Join us for a new chapter in the history of the Summit as we roll out a conference led 2 days of keynote session, awards, premium exhibition, port visits and networking.

Delegate registration now available online.

Organised by

Seatrade

Supported by

Sponsored by

ETIHAD RAIL

UNION NATIONAL BANK

Supporting Organisations

The Nautical Institute

WISTA UAE

PORT TECHNOLOGY INTERNATIONAL

Published by:
Maritime Information Services Ltd
Trans-World House, 100 City Road
London EC1Y 2BP

Tel: +44 (0)207 871 0123
Fax: +44 (0)207 871 0101
E-mail: info@porttechnology.org
Website: www.porttechnology.org

Managing Director:
Dan King
dking@porttechnology.org

Editorial Coordinator & Online Editor:
Linton Nightingale
lnightingale@porttechnology.org

Sales Manager:
Michael Stewart
mstewart@porttechnology.org

Business Development Manager:
Leon Thomson
lthomson@porttechnology.org

Sales Executive:
Lance van Romunde
lvanromunde@porttechnology.org

Subscriptions Executive:
Emmanuel Alode
ealade@porttechnology.org

Design & Production:
Tina Davidian, Stuart Wright,
Daniel Brown

Distribution and Print organised by:
Head to Head Limited

Front cover:
Photo courtesy of the Busan Port Authority (BPA). BNCT Co., Ltd. (Busan New Container Terminal), Busan New Port, Busan, South Korea.

Fifty-Seventh Edition, March 2013
ISSN: 1358 1759

Introduction

The expansion and development of East Asian ports has been relentless over the past twenty or so years. The export-led growth strategy adopted by developing nations along with institutional and economic reforms helped East Asia to become one of the fastest growing regions in the world, and while the global economic downturn stunted this age of growth, the majority of East Asian ports have continued to thrive.

The Port of Busan, which established itself as one of the world's leading ports in the early 1990s, is one notable success story. The restructuring of its port authority – Busan Port Authority (BPA) – with the removal of bureaucratic constraints helped both the port and Korea as a whole achieve their objective of becoming the logistical hub in Northeast Asia. As a result, Busan Port has nearly tripled its capacity over the last decade through the modernisation of existing port facilities and by constructing state-of-the-art container terminals, including Asia's first vertically automated container terminal the Busan New Port Container Terminal (BNCT), who we have an exclusive article from on page 36 in this issue. However, as BPA president Lim Ki-Tack explains, the redevelopment of Busan Port is far from over. (page 98)

Continuing with our East Asian theme, Dr. Adolf K.Y.Wing (page 9) from the PortEconomics group analyses East Asia's transition in recent years from efficiency enhancement to regional competitiveness. In addition, Aecom's Ben Graffen discusses the growing number of challenges faced by engineers in regulating the environmental impact of container terminal construction, and looks at waste management, water and regional air quality issues linked to port developments in densely populated areas such as Hong Kong. (page 19)

Elsewhere, as the global maritime community prepares to convene on Los Angeles for the 28th IAPH World Ports Conference, IAPH secretary general Susumu Naruse talks exclusively to PTI about this year's conference and what critical issues will be central to discussions in May. (page 12) One item expected to be high on the agenda this year will be the mitigation of greenhouse gas emissions and the related software that ports can use to estimate emissions and design pollution reduction strategies. The Georgia Port Authority, as explained in our Liebherr-sponsored container handling section (page 42), has already began to reap the rewards of one such technology by converting its fleet of ship-to-shore container cranes from diesel to electric power, which is also one of the areas of discussion covered in our exclusive interview with the director of port technology at Konecranes, Hannu Oja.

In addition, this issue's dry bulk and specialist cargo handling section questions whether we are under-utilising the inland river routes found in the US, Europe and Asia, and if we are, is the Seasnake marine, a purpose built vehicle for the transportation of liquid, bulk and container cargo, the answer? – find out on page 56. Meanwhile, in our Customs and Security segment, Steven Jones, the maritime director at SAMI, explains the relationship between piracy and ports located in close proximity to so-called high-risk areas. (page 92)

To keep up to date with the latest breaking news make sure you log on to our website (www.porttechnology.org), and, if you haven't already, remember to sign up for our new daily news service sent directly to your inbox each and every morning.

Finally, as always I'd like to thank all of our authors and contributors, and offer a special thanks to those of you that took part in our recent reader survey – the information you have provided has so far proved vital.

Linton Nightingale
Editorial Coordinator & Online Editor
Email: lnightingale@porttechnology.org
Twitter: @PortTechnology

Visit our new-look website at www.porttechnology.org

Network with other PTI readers on our LinkedIn group:
http://linkd.in/porttech

Contents

We supply your complete cable project !

Expert since 1969

Instrumentation
Energy
Control
Industrial data

and

Trunkings
Tubes
Cable glands

UL, CSA, H (Europe), Gost, BS, ...

TELEC
CABLING SOLUTIONS

www.telec.be

Telec Belgium
Tel : +32 4 252 75 73
Fax : +32 4 252 70 14
Mail : cable@telec.be

Contents

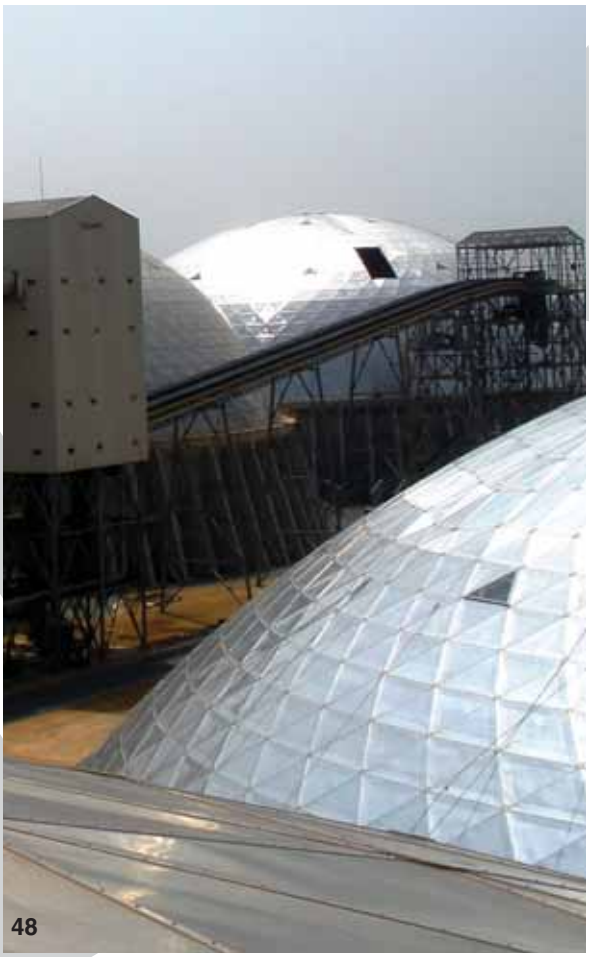

Contents

Global Issues

"Verification of a container's actual weight is not technically difficult. It simply requires an authorised or certified weighing scale to provide acceptable documentation showing that the container has been weighed and what that weight is."

'Regulation of container weighing,' page 12.

Port development in East Asia: From efficiency enhancement to regional competitiveness

Adolf K.Y. Ng, associate professor, Department of Supply Chain Management, I.H. Asper School of Business, University of Manitoba, Canada

Introduction

East Asia was one of the fastest growing regions in the past decades thanks to the export-led growth strategy of various developing countries. With most of the world's traded cargoes being carried by sea, East Asian ports had also undergone substantial transformation and development. Indeed, their direction of development was closely knitted to global and regional economies. This article provides an overview of different phases of port development in East Asia.

Historical background

In recent decades, major ports in East Asia underwent a phase of massive neo-liberal management and institutional reforms. The core objective was to enhance efficiency and financial investments so as to complement the trend of containerisation, increase in international trade and globalisation, of which many developing countries in East Asia undertook economic reform programmes with the objective to transform respective economies based on export-led growth. Especially in the 1990s and early 2000s, one could witness a substantial increase in the privatisation of new container terminals through concession agreements (like BOT, BOOT and BOO). Good examples included Singapore, Shenzhen and Shanghai.

Changing philosophies

Complementing management reform was the changing philosophy, aiming to readdress the traditionally bureaucratic nature of port governance. It is important to note however, that many such ports were only partially privatised, with the public sector still retaining significant presence and overall control due to the perceived strategic importance of ports to respective countries or regions. For example, before joining the World Trade Organization (WTO) in 2002, the Chinese government imposed a 49 per cent ceiling on foreign ownership of all newly established container terminals in Chinese ports (except Shenzhen). Such a concern also explained why many such reforms were modelled in accordance to the 'landlord port' model as proposed by the World Bank's port reform toolkit, of which it resulted in most of the concession agreements being arranged under public-private partnerships (PPP). Hence, during this period, it was a normal phenomenon that the day-to-day operations of terminals were given to private terminal operators (like HPH and PSA) while port authorities remained fully public and continued to own the port's land, as well as maintaining customs, regulatory, safety and security functions of ports. Under such a system, a number of East Asian ports developed quickly. In the 1990s, Hong Kong, Singapore, Kaohsiung and Busan had already established themselves as leading ports around the world, while one could also witness the fast development of Shenzhen and Shanghai, both in terms of throughputs and capacity.

Current challenges

However, past success often creates new challenges nowadays. As mentioned, management and institutional reforms of ports in the 1990s and early 2000s were largely adopted so as to complement the development of export-led growth economies. Simultaneously, there was a realistic need to develop some port infrastructure capacities to some developing countries within the region, notably China. Since the mid-2000s, it was clear that some significant changes became visible which made such a direction of development obsolete. After nearly two decades of capacity building, the region started to experience an oversupply of port facilities. For example, by 2005, within the Pearl River Delta (PRD) with a small area of about 150 x 150 square kilometres, nearly 20 container terminals with highly overlapping hinterlands had been established (see Figure 1), thus intensifying inter-port competition within the region.

This was not helped by the changing industrial and economic landscapes. Living expenses in PRD have been growing fast, forcing manufacturing firms to increase salary levels continuously at an annual rate of 17 percent. Also, preferential policies from local governments were gradually removed. As the latter started to reserve lands and resources for service-oriented industries, the rapid fading away of PRD's labour-intensive industrial landscape occurred. This forced manufacturing firms to explore alternative, notably western and more inland, locations like Hunan, Sichuan and Chongqing. Such a development would bring significant challenges to major ports in East Asia which had substantially benefited from export-led growth due to the

Figure 1: Container terminals in the Pearl River Delta in 2005

region's manufacturing boom, as it would significantly affect the competitive landscape of ports.

Shifting traffic and the rise of regional rivalry

Intra-regionally – like PRD, there would be a substantial decline in the already overlapping hinterland, and thus demand for stevedoring services among ports. For example, since the turn of the century, Hong Kong port faced considerable challenges from its geographically proximate, and initially peripheral, neighbours, notably Shenzhen and Guangzhou, not helped by the economic turmoil in 2008 which accelerated the industrial transformation of PRD. In the past five years, in terms of container throughputs, Hong Kong's ranking had gradually slipped from first to third behind Singapore and Shanghai, with Shenzhen rapidly snapping at its heels. Simultaneously, the inland relocation of manufacturing plants, with the expected hinterland access costs, implied that ports from far away regions, of which competition of any significance hardly existed before, had gradually become serious market rivals. In this case, as the Yangtze River traditionally offered competitive inland shipping services to major inland cities and provinces in China, manufacturers relocated to these regions found that the transport cost to Yangtze Delta (YRD) ports, like Shanghai and Ningbo, could be lower than PRD ones. This could cause substantial shift of traffic from one region to another.

Changing competitors and more responsive port authorities

Admittedly, such a comprehensive relocation would not be straightforward, with the overall effects of this transformation subject to future observation and research. However, one thing is for sure, the nature of port development in East Asia would change dramatically. There was a necessity to shift from efficiency-oriented management and governance system, to sustaining competitiveness. Also, inter-port competition would not only be a matter of rivalries between individual, proximate ports, but also between 'port regions'. This implied that any port development would only emphasise technical efficiency and capital investments would no longer be adequate. In the immediate past decade, one could identify two rising trends. First, port authorities which largely remained bureaucratic, had transformed and responsibilities had expanded beyond the provision of public goods. A good example was Busan port, of which its port authority - Busan Port Authority (BPA) - was restructured and became a public corporation. BPA played pivotal roles in the future development of Busan port, notably how it complemented Korea's vision in becoming the logistical hub in Northeast Asia.

Regional collaboration as the feasible solution?

Moreover, one could also witness the increasing trend of proximate, competing ports to collaborate so as to relieve the pressure from potentially destructive inter-port competition. In PRD, Hong Kong port underwent strategic changes and gradually started to integrate within China's national and regional planning. Recently, the National Development and Reform Commission of China included Hong Kong port in The Outline of the Plan for the Reform and Development of PRD (2008-20). Also, according to the Framework Agreement on Hong Kong/Guangdong Co-operation (2010), signed between the Hong Kong SAR and Guangdong Provincial Governments, the former would be expected to integrate within the PRD port clusters so as to help in establishing an integrated regional port system within PRD. How they would cooperate however, is still subject to discussions and political negotiations, complicated by the "One Country, Two Systems" arrangement. Indeed, the Chinese government even divided its coastline into five main 'port regions' (Northeast/Bohai, YRD, Southeast/Taiwan Strait, PRD and Southwest). Ports within each port region were expected to carry out functions which were complementary to each other, with the objective of enhancing the overall competitiveness of the port region.

Conclusion

This article provides a brief review on the development and transformation of ports in East Asia. It indicates that ports within this part of the world have gradually re-emphasised from technical efficiency and capital investments to regional competitiveness, catalysed by the rapid transformation of the global and regional economies. Port development nowadays has become more uncertain, especially since the economic turmoil in 2008, and it is hoped that this article will provide some useful insight into this.

ABOUT THE AUTHOR

Dr. Adolf K.Y. Ng is Associate Professor at the I.H. Asper School of Business, University of Manitoba, Canada. Received his doctoral degree from University of Oxford, UK, he publishes extensively on port economics and policy, transport geography, regional development, climate change adaptation and strategy, maritime security and education. He was an awardee of the Fulbright Program and Endeavour Research Fellowship, thus worked as Visiting Scholar at Stanford University, USA, and Australian Maritime College, Australia, respectively. Currently, he is also Council Member of the International Association of Maritime Economists (IAME), and Chartered Member of the Chartered Institute of Logistics and Transport (CMILT)..

ABOUT THE ORGANISATION

PortEconomics is a web-based initiative aiming at generating and disseminating knowledge about seaports (www.porteconomics.eu). It is developed and empowered by the members of the PortEconomics group, who are actively involved in academic and contract research in port economics, management, and policy. Since October 2012, Port Technology International and PortEconomics are engaged in a partnership.

ENQUIRIES

Dr. Adolf K.Y. Ng
Dept. of Supply Chain Management
I.H. Asper School of Business
University of Manitoba
686 Drake Centre
181 Freedman Crescent
Winnipeg, Manitoba, Canada
Tel: +1-204-474-6594
Fax: +1-204-474-7545
Email: ngkya@cc.umanitoba.ca

The 28th IAPH World Ports Conference

Working on today, focusing on tomorrow

Susumu Naruse, secretary general, International Association of Ports and Harbors (IAPH), Tokyo, Japan

Introduction

The International Association of Ports and Harbours (IAPH) meets every two years at its World Ports Conference, which is often referred to as the World Ports Summit. At the upcoming 28th IAPH World Ports Conference in Los Angeles, USA, 6-10 May 2013, world port directors and managers will gather under one roof to discuss critical issues facing the global maritime community such as global economic realities, environmental challenges and sustainable practices, maritime safety, etc. under the banner theme 'Working on Today, focusing on tomorrow.'

"We are thrilled to welcome IAPH members and guests to our city, where this organisation was founded nearly 60 years ago," said Dr Geraldine Knatz, executive director of the Port of Los Angeles and president of this association. "As we continue to carry out our mission of developing and sharing best practices for ports around the globe, participants can expect Los Angeles to more than live up to its reputation as a world-class trade and entertainment centre."

Keynote speakers

Keynote speakers include captain Richard Phillips of the Maersk Alabama, who was held hostage in a 5.5 metre lifeboat by Somali pirates in 2009. Mr Phillips offered himself as a hostage in exchange for the safety of his crew and his ship after pirates attacked the 17,000 deadweight tonnes cargo ship. The five-day standoff ended after US naval forces intervened. The pirate attacks in the area of the Gulf of Aden and off-Somalia waters still pose a serious threat to the ships navigating in the area and the ports along the coasts of the area have been affected by decreasing trade volumes. The lessons Mr Philips has learned from his experience as a hostage should be of immense value to all of us engaged in international maritime trade.

Dr Geraldine Knatz at work

Working sessions

In Los Angeles, there will be four open working sessions where delegates can learn the latest trends and issues in the world port and maritime industries from prominent speakers recruited from around the world. A distinguished panel of economists will join us at one of the sessions to take a close look at the world economy, so that we can predict the world trade patterns in 2013 and how they might impact on the world maritime trade and the port industry. As ports are not immune to what happens in the local, national and international economies, the global economic perspective to be gained will help port managers and directors think globally and act locally.

Another interesting session should be on the subject of natural disaster response and recovery, where a panel of port professionals and experts will share with us lessons learned from a sudden and unpredicted natural disaster such as an earthquake, tsunami and hurricane, especially how they have recovered from the disaster and reconstructed the damaged structure and facilities and how they are now preparing and planning for a future disaster.

Climate issues

There will be a session devoted to climate issues, where the delegates will be updated on the IAPH World Ports Climate Initiative (WPCI) that was launched in 2008 – our commitment to reduce greenhouse gas emissions and improve air quality in ports while strengthening ports as vital economic engines. Seven project groups have since been established to explore topics like the carbon foot printing calculator - software that ports can use to estimate emissions and design pollution reduction strategies; onshore power supply, meaning shoreside electricity and onshore power supply also known as alternative maritime power or cold ironing. Other projects being explored include the environment ship index – a web-based tool for tracking clean vessel calls and rewarding carriers that route environment-friendly ships to participating ports; LNG fuelled vessels; eco-friendly cargo handling equipment; lease agreement templates; and intermodal transport. The first three project groups have issued and developed a number of guidance documents and they are available online at http://wpci.iaphworldports.org/. The other four projects are now studying and investigating their topic and their findings will be made available during the upcoming Los Angeles conference.

New breakout sessions will be organised to focus on the cruise business and women in the maritime industry. The latter is born out of the IAPH's Women's Forum, established in May 2012 at the organisation's mid-term ports conference and board meeting held in Jerusalem, Israel. The session will focus on how the entire maritime industry benefits from the advancement and empowerment of women.

IAPH World Ports Conference 2013

Technical committees

IAPH has eight technical committees that address, monitor and explore topics and issues of interest and concern to the entire membership. They normally meet at least once a year. They last met in Jerusalem, Israel, May 2012, at the mid-term conference and will meet during the upcoming IAPH World Ports Conference, Los Angeles, May 2013.

Over the past two years, the Port Planning and Development Committee have been studying two interesting topical issues. One concerns offshore wind farms and they have looked into what sort of specialised port infrastructure should be required to accommodate and install offshore wind farms. An overview of offshore wind farms that are now in operation, under construction and planned around the world is expected as part of its report to be made available in Los Angeles, May 2013.

The other is related to arctic shipping, which is interesting but complex. The committee has extensively investigated the issue from the standpoint of port managers, including the cost analysis, comparing the polar shipping routes to the existing routes.

The Port Operations and Logistics Committee has tackled the complicated but challenging issue of measuring container terminal productivity and throughput. Invited by the UNCTAD, IAPH was represented on the subject at its ad hoc expert meeting on assessing port performance held on 12 December 2012 in Geneva, Switzerland, where chairman J. Bassan, Port of Ashdod, Israel, made a stimulating presentation. A survey by the committee will determine if a method of such measurement is in place at IAPH member ports and if a standardisation is possible.

The conference marks the first time the organisation will meet under its new vision and mission statements. Updated in May, the guiding principles reinforce IAPH's focus on "strong member relationships, collaboration and information-sharing" to address common concerns, advocate for international solutions and promote sustainable practices that benefit the industry and the global community.

ABOUT THE AUTHOR

Susumu Naruse graduated from Tokyo University in 1975 and furthered his education at Stanford University, earning a Master's degree in infrastructure planning and management in 1986. He has accumulated extensive experience in working with port authorities in foreign countries as well as Japan through working in various offices of the Government. He first participated in IAPH activities in 2000 as one of the members of the executive committee, a position he held until 2006. In 2009, he assumed his current position as Secretary General.

ABOUT THE ORGANISATION

Founded in 1955, **IAPH** is a global alliance of some 200 ports and 150 maritime companies represented from 90 countries. IAPH member ports altogether handle nearly 80 percent of world container traffic and more than 60 percent of world seaborne trade. Our aim is to foster cooperation among member ports, promoting a vital role ports in the world trade. Based in Tokyo and recognized as the only voice speaking for ports around the globe, IAPH is given Consultative non-governmental organization (NGO) status from the United Nations agencies, including the IMO.

ENQUIRIES

Mr. Susumu Naruse, Secretary General
The International Association of Ports & Harbors (IAPH)
7F, South Tower New Pier Takeshiba
1-16-1 Kaigan, Minato-ku
Tokyo 105-0022, Japan
Tel: +81-3-5403-2770
Fax: +81-3-5403-7651
Email: info@iaphworldports.org
Web: www.iaphworldports.org

Regulation of container weighing

Aron Sorensen, chief marine technical officer, BIMCO

Shipping is a global industry and with more than 90 per cent of international trade being carried by sea, it is the most important element in the world's supply chain of goods. Shipping cannot fulfil its role without clearly defined rules of play eg. through internationally agreed regulatory instruments with focus on safety of ships, seafarers and environmental protection. BIMCO works to facilitate harmonisation and standardisation of commercial shipping practices while promoting fair business transactions and free access to markets.

When it comes to weighing of containers, the shipping industry already has an international regulation scheme in place. The present regulation two in chapter VI of the International Convention for the Safety of Life at Sea (SOLAS Convention) requires the shipper of containerised goods to provide the ship's master or his representative with the gross mass of the container, prior to loading on the ship, confirmed in writing and with the appropriate shipping documents. Furthermore, the regulation requires that the shipper shall ensure that the gross mass of the loaded (or 'stuffed') container is in accordance with the gross mass declared on the shipping documents. The SOLAS Convention does not however require that a container loaded with cargo shall be weighed to verify the documents.

Safety issues

So what is the problem? Unfortunately it frequently occurs that the shipper's declared weight is incorrect. Ships, trucks and port facilities using incorrect weights in the handling and stowage of the container have been the cause or a contributing cause to numerous operational and safety incidents and accidents.

For feeder and medium sized container vessels with loading capacity of less than 5,000 twenty-foot equivalent units (TEUs), inaccuracy of container mass could lead to loss of lives and loss of vessels. If a heavy container is declared as light, this container will be stowed in the upper tiers. This is done to ensure that the centre of gravity of the container stack and the overall centre of gravity is kept as low as possible. If the centre of gravity of the ship becomes erratic due to the wrongly declared container masses, this may cause instability or even a negative stability and could cause the vessel to capsize. Furthermore as the ship uses up bunkers from the bottom tanks, the centre of gravity and thereby also the stability will be influenced during its voyage.

In June 2011 the DENEB capsized in Algeciras due to a significant stability problem which caused her to capsize. A review after the incident found that out of the 168 containers on the load list, 16 – or roughly one out of 10 – containers had

The DENEB capsized in Algeciras

actual weights far in excess of the declared weights. The actual weights exceeded the declared weight in a range from between 1.9 times as much as the declared weight to as much as 6.7 times the declared weight. The total actual weight of these 16 containers was more than 278 tonnes above their total declared weight of about 93 tonnes, making it four times higher than their declared weight.

For larger ships with a capacity of more than 5,000 TEUs, the impact of wrongly declared weights is predominantly restricted to stack weight and lashing violations. As container vessels grow in capacity, more containers are stowed on deck and the strength tolerances are reduced while the breadth of the ship normally ensures sufficient stability.

In January 2007 MSC NAPOLI was seriously damaged in a severe storm. The hull cracked and this caused a flood in the engine room. The ship was later beached off the Devon coast in the UK. The accident was found to be the result of structural failure of the vessel hull skin and girders at the interface between the transverse stiffening of the engine room and the longitudinal stiffening of the cargo area. This was due to the loading on the structure, the containers and the rare sea state exceeding the capacity of the hull girders in this area. During the salvage operation, 660 containers stowed on deck, which had remained dry, were weighed. According to the 'Report on the investigation of the structural failure of MSC Napoli', by the UK Marine Accident Investigation Branch, 137 (20 per cent) of these containers were more than three tonnes different to their declared weights. The largest difference was 20 tonnes, and the total weight of the 137 containers was 312 tonnes heavier than on the cargo manifest.

Industry work to amend SOLAS

Incorrectly declared container weights have been a problem for many years and the industry has not managed to solve this through improving standards. In July 2011 The World Shipping Council (WSC), the International Chamber of Shipping (ICS), and BIMCO submitted a paper to the IMO's sub-committee on dangerous goods, solid cargoes and containers (DSC 16) expressing concerns and advocating the need to ensure the safety of the ship, workers both aboard ship and ashore and, the safety of other cargo by requiring that containers' actual weights are verified and provided to the port facility prior to loading aboard a ship.

Verification of a container's actual weight is not technically difficult. It simply requires an authorised or certified weighing scale to provide acceptable documentation showing that the container has been weighed and what that weight is. Container vessels do not have cranes capable of weighing containers and therefore they must depend on the container weighing to be performed on-shore.

We as ship owners prefer the actual weight to be measured before the container is delivered to the port facility by a service provider, or at the port facility or the terminal itself. Many ports already have weighing scales at their 'in-gates' and increasingly, these also have container repositioning and lifting equipment on them. In some locations, like the US, mandatory export container weighing has been implemented for years without undue cost or impairment of efficient port operations.

Some shippers have noted that, although they do not weigh the container after they have stuffed and sealed it, their cargo weight declarations are reasonably accurate because they know the number and the weight of the cargo units that have been loaded into the container and the tare weight of the empty container. They therefore should not be subjected to further regulatory requirements because other shippers' weight declarations are inaccurate.

We realise that most shippers do not have weighing scales at their container stuffing locations, and furthermore, even if scales are available within the country where the shipper is domiciled, they may not be conveniently located between the container stuffing location and the receiving port facility. It would be impractical for the tens of thousands of different shippers of containerised goods around the world to install container weighing devices on their premises.

Industry proposal to amend SOLAS

After DSC 16, WSC, ICS and BIMCO had time to develop a concrete text to amend SOLAS. It was presented at DSC 17 in June 2012. Through consultations with flag states and relevant stakeholder organisations, the final proposal was sponsored by Denmark, the Netherlands, the US, BIMCO, the International Association of Ports and Harbours (IAPH), ICS, the International Transport Workers Federation (ITF) and WSC. The following new SOLAS paragraph was proposed:

'A freight container containing cargo shall not be loaded aboard a ship unless the master or his representative and the terminal representative have the verified gross weight of the container obtained by a weighing of the container. Such verified weights shall be available sufficiently in advance of vessel loading to be used in the vessel stowage plan.'

The rationale for the proposal is that the best way to verify the mass of a stuffed container is to weigh it. Also, the effective port and flag state enforcement is behind such an obligation, while enforcement of SOLAS obligations solely on shippers outside the ship-port interface is difficult at best and non-existent at worst. This would allow the obligation to be met by the shipper obtaining a weight verification, while recognising that many shippers will find this impractical and in such cases impose an obligation on the vessel and the port facility. It would therefore institutionalise a routine practice that all containers' actual verified weight be known by all responsible parties before containers are stowed aboard a ship.

During consultations a number of flag states expressed various reservations about the proposal. Some did not agree that container weight verification requires weighing all loaded containers. Some were not prepared at this time to support creating a port state SOLAS regulatory obligation on marine terminals with respect to container weight verification.

Status of IMO work

The above-mentioned and other concerns were expressed further at the DSC 17 and the debate on the issue was lengthy. At DSC the issue of container weighing was debated in a working group (WG). The WG reported the result of its deliberations to the plenary of the DSC 17.

On the positive side, agreement could be reached that the most accurate way to determine the weight of the container was by weighing. Taking into account however that not every country has the necessary resources to actually perform the weighing, it was also agreed that there was the need for flexibility when drafting new SOLAS requirements.

After considering many issues including the practicalities of implementation of the new requirement, the WG agreed to a set of draft amendments to SOLAS. In brief, the draft amendment meant that in the future, if cargo was carried in a freight container, the gross mass should be verified by the shipper, either by weighing the packed freight container using calibrated and certified equipment or weighing all packages and cargo items, including the mass of pallets, dunnage and other securing material to be packed in the freight container and adding the tare mass

of the freight container to the sum of the single masses, using a certified method approved by the competent authority of the state in which packing of the freight container was completed.

The shipper of a freight container should also ensure that the verified gross mass was stated in the shipping document and if the shipping document did not provide the verified gross mass and the master or his representative and the terminal representative had not obtained the verified gross mass of the loaded freight container, it should not be loaded on to the ship.

Next steps

Sadly, the above-mentioned proposed draft SOLAS amendments were rejected by the plenary of the DSC 17 and the text will now have to be reconsidered in a correspondence group. Due to time constraints, the WG was not able to consider a number of associated draft guidelines regarding verified container weights and the WG agreed to recommend to the sub-committee that the draft guidelines should be further considered by a correspondence group, which will present its work to DSC in September 2013.

The delay means that the earliest we will see an international regulation on container weighing is 2016, depending on whether the DSC 18 can reach consensus on the draft proposed text and the associated guidelines and their subsequent approval by the Maritime Safety Committee.

ABOUT THE AUTHOR

Aron Sorensen is the Chief Marine Technical Officer at BIMCO with responsibility for the association's technical affairs and for monitoring the regulatory developments at IMO and other international organisations. Following a career at sea as a deck officer prior to joining BIMCO he worked at the Danish Maritime Authority. Aron Sorensen also serves on a number of committees such as IACS' Quality System Certification Scheme Advisory Committee, Korean Register European Committee, and attends a number of industry working groups.

ABOUT THE ORGANISATION

BIMCO is a shipping association providing a wide range of services to its global membership of stakeholders who have vested interests in the shipping industry, including ship owners, operators, managers, brokers and agents. The association's main objective is to facilitate the commercial operations of its membership by means of developing standard contracts and clauses, and providing quality information, advice, and education. BIMCO promotes fair business practices, free trade and open access to markets and is a strong advocate for the harmonisation and standardisation of all shipping related activity. Accredited as a non-governmental organisation (NGO) with all relevant United Nations agencies and other regulatory entities, BIMCO actively promotes the application of international agreed regulatory instruments.

Port Planning, Design and Construction

"While there are real opportunities for achieving sustainable and long term growth from port investment in emerging markets, all that glitters is not necessarily gold."

"Optimising port investment," page 22.

Regulating the environmental impacts of container terminal developments

Ben Graffen, senior engineer, transportation, Aecom

Introduction

Legislation governing environmental permitting for infrastructure development projects is the norm in both developed and developing countries. The degree of assessment, transparency, public participation and discretion afforded to the approving authority varies from country to country. Hong Kong is fortunate to have in place a rigorous, transparent and pragmatic environmental permitting legislation in the form of the Environmental Impact Assessment Ordinance (EIAO). This article aims to outline the requirements of the EIAO and provide a brief overview of the key issues and potential implications on the planning, design, construction and operation of further container terminal development in Hong Kong. While written in this context, the general concepts are broadly applicable to any country or territory with a well developed environmental permitting system.

Background on the EIAO

The EIAO came into operation on 1 April 1998 with the stated purpose to 'Provide for assessing the impact on the environment of certain projects and proposals, for protecting the environment and for incidental matters'. The mechanism for achieving this aim is the environmental impact assessment process and environmental permit system. The EIAO is administered by the director of environmental protection with the secretary for the environment being the approving authority.

The legislative framework of the EIAO includes the separate 'Technical Memorandum on Environmental Impact Assessment Process' which provides guidance to the director on the administration of the EIAO including setting out the principles, procedures, guidelines, requirements and criteria for the submission and acceptance of environmental impact assessment reports and the issuance of environmental permits.

Applying the EIAO to container terminal development

Schedules two and three of the EIAO specify the criteria that define designated projects falling under the control of the EIAO. There are a number of criteria by which any significant container terminal development would be classified as a designated project under the EIAO.

In the first instance, the engineering feasibility study for the development would be classified as a designated project under schedule three as "urban development projects with a study area covering more than 20ha". Aside from this, the construction and operation of the development would also be classified under schedule two as "a container terminal (including its container backup facility" as well as potentially "reclamation works (including associated dredging works) more than 5ha in size" and "a dredging operation exceeding 500,000m3".

Other criteria may or may not be met depending on the location and scale of the proposed development. What is certain is that any further container terminal development in Hong Kong would fall under the control of the EIAO. Similarly, any conditions attached to the approval of the EIA report and the environmental permit would need to be incorporated in the planning, design, construction and operation of the proposed facility. This would include any mitigation measures identified for the avoidance, minimisation and control of the identified potential environmental impacts during both the construction and operation stages of the project.

Implications for future development in Hong Kong

Potential environmental impacts associated with any substantial container terminal development may include varying degrees of impact on air quality, noise, water quality, waste management,

View over existing Kwai Tsing container terminals in Hong Kong

A multidisciplinary approach for new horizons

Dredging International (DEME Group) provides an extensive range of specialized services in the fields of dredging, land reclamation and offshore marine engineering. The multidisciplinary nature of DEME's activities enables Dredging International to offer total solutions to their clients all over the globe. The company fosters a strong innovative approach with care for the environment and dedication to sustainable development. "Creating land for the future" is DEME's contribution to a better world for future generations.

Dredging International

Marine & Waterway Contractor

Dredging International N.V. is a member of the DEME Group.
Haven 1025, Scheldedijk 30 / B-2070 Zwijndrecht, Belgium /
T +32 3 250 52 11 / F +32 3 250 56 50 / info@deme.be / www.deme.be

DEME: creating land for the future

ecology, fisheries, landscape and visual and cultural heritage.

The majority of potential environmental impacts associated with container terminal development are likely to be localised and site specific. For instance, the magnitude of potential impacts on cultural heritage is generally dependent on the nature and past usage of the proposed site with impacts restricted to affected areas within or near to the site boundary. In this way, the majority of potential impacts can be avoided or minimised through careful selection of the site for the proposed development. However, several key environmental issues relating to air quality, water quality and waste management would have wider implications and are less dependent on the proposed site. These issues are likely to be applicable to a greater or lesser extent to any further container terminal development in Hong Kong.

Considering impacts on air quality

Improving regional air quality is one of the greatest environmental challenges facing Hong Kong and the Pearl River Delta region. The requirements of the EIAO with respect to air quality are based around a set of air quality objectives (AQO) which define limits on various air pollutants.

Container terminal operations are by nature plant and equipment intensive as well as being significant generators and attractors of road and marine traffic. The minimisation of potential emissions associated with container terminal development is likely to require the consideration of electrified or other low emissions cargo handling equipment such as electric rubber tyred gantry (RTG) cranes and liquefied natural gas or hybrid off-road tractors as well as the provision of on-shore power (also known as cold ironing) for vessels at berth.

Aside from these measures, the government of the HKSAR has recently announced proposed new AQOs which are expected to be implemented in 2014. The proposed new AQOs have been specified with reference to recommendations of the World Health Organisation (WHO) and are packaged together with various air quality improvement measures. These measures include plans to reduce marine emissions by mandating cleaner fuels for local vessels, requiring ocean-going vessels to use cleaner fuels while berthing and in the longer term, setting up an emission control area in Pearl River Delta waters.

Considering impacts on water quality

Deep water marine access and substantial land area are absolute requirements for any container terminal development. The need for dredging and reclamation is therefore inherent to a greater or lesser extent in any further container terminal development in Hong Kong. Similar to air quality, the requirements of the EIAO with respect to water quality are based around a set of water quality objectives (WQO) which define limits on various water pollutants. The key water quality issue during the construction phase is the generation of suspended solids within the water column during dredging and reclamation activities and associated impacts on water sensitive receivers and other beneficial uses, as well as nearby marine ecological and fisheries resources.

The magnitude of these potential impacts is driven primarily by the scale of dredging and reclamation works associated with the development and their proximity to sensitive receivers and other beneficial uses. Innovative engineering solutions are available that can potentially minimise the quantity of dredging required for both reclamation and the construction of sea walls eg. the cellular coffer dam construction method currently being employed for the Hong Kong-Zhuhai-Macao bridge Hong Kong border crossing facility. However, the need for dredging to provide adequate depth in navigation channels, basins and berths will remain a requirement irrespective of the methods employed for seawall and reclamation construction. Previous EIA studies have demonstrated that the generation of suspended solids during dredging and reclamation can be effectively controlled through the use of silt curtains and closed grab buckets in conjunction with the implementation of limits on production rates for dredging and filling activities.

Beyond these construction stage impacts, the reclamation configuration itself may induce impacts on the tidal flows. These potential impacts need to be modelled and quantified at an early stage and the reclamation outline optimised in order to minimise potential impacts on tidal flushing effects through the nearby waterways as well as potential impacts on water quality at existing seawater intakes and outfalls.

Waste management implications

Waste management implications in the context of further container terminal development relate primarily to the disposal of dredged sediments generated by the development. Similar to water quality impacts above, the magnitude of waste management implications associated with further container terminal development in Hong Kong relate primarily to the generation of dredged sediments associated with navigation dredging or dredging for the construction of reclamation or sea walls. The key issue in this case is the identification of suitable disposal locations for the dredged sediments. Again, these implications can be minimised through the application of innovative engineering solutions for land formation in order to minimise the quantity of dredging required.

Electrical RTG cranes

Typical grab dredging operation within silt curtain containment

Further requirements

In addition to the requirements of the EIAO, it is worth noting that the Protection of the Harbour Ordinance (PHO) enacted in June 1997 enshrines in law a basic presumption against further reclamation within the boundaries of the harbour as defined in schedule three of the interpretation and general clauses ordinance. The eastern limit extends across Lei Yue Mun from Siu Chau Wan Point to Ah Kung Ngam Point, whilst the western limit extends north-south from Green Island to the south eastern corner of Tsing Yi Island and thereafter extending from the north western corner of Tsing Yi Island due north to the mainland. The Court of Final Appeal handed down its judgement that the presumption against reclamation would only be rebutted where three tests are satisfied: that there is an overriding public need for reclamation; there is no reasonable alternative to reclamation; and that the proposed reclamation involves minimum impairment to the harbour. Whilst the applicability of the PHO to further container terminal development is yet to be tested, any proposal for further container terminal development within the harbour limits would need to satisfy these tests.

Conclusion

The EIAO provides Hong Kong with a rigorous, transparent and pragmatic environmental permitting system. The requirements of the EIAO with respect to key environmental issues relating to air quality, water quality and waste management associated with further container terminal development in Hong Kong can potentially be satisfied through the application of best practice terminal equipment technology, construction methods and other mitigation measures.

The requirements of the EIAO mean that such measures will need to be identified at an early stage of the project and incorporated into the planning, design, construction and operation of the proposed development.

ABOUT THE AUTHOR

Ben Graffen is a senior engineer working within Aecom's Hong Kong based Ports and Marine team. He has experience in the planning, design and construction of port and marine infrastructure gained through his involvement on a variety of port development projects in Australia, Hong Kong and India.

ABOUT THE COMPANY

Aecom is a global provider of professional technical and management support services to a broad range of markets, including transportation, facilities, environmental, energy, water and government. With approximately 45,000 employees around the world, Aecom is a leader in all of the key markets that it serves. Aecom provides a blend of global reach, local knowledge, innovation and technical excellence in delivering solutions that create, enhance and sustain the world's built, natural, and social environments. A Fortune 500 company, Aecom serves clients in more than 130 countries and had revenue of $8.2 billion during the 12 months ended September 30, 2012. More information on Aecom and its services can be found at www.aecom.com. Follow Aecom on Twitter at @Aecom.

ENQUIRIES

Mr. Ben Graffen, Senior Engineer, Transportation
Aecom
10/F, Tower 2
Grand Central Plaza
138 Shatin Rural Committee Road,
Shatin
New Territories
Hong Kong
Tel: +852 3922 9000
Fax: +852 2691 2649
Email: askasia@aecom.com;
Web: www.aecom.com

New research to make ports safer

How to mitigate impact of a passing ship's wash

Marco Pluijm, senior ports specialist, Bechtel, and chairman of ROPES

In recent years, the size, speed and power of ships has increased dramatically, increasing the size of their wash, which can cause moored ships to come off their moorings and affect the safe loading and unloading of vessels. Last year, in the port of Santos, Brazil, the bulk carrier, Yusho Regulus, broke her moorings in the wake of a passing vessel, and hit a pier, damaging two loaders. The vessel itself was damaged and the accident left both loaders inoperable, which caused delays to cargo operations in one of Brazil's busiest ports. While this incident involved the unloading of soya beans, an incident involving the transfer of oil, gas or other hazardous materials in ports is potentially more dangerous. The ports industry is so concerned about the impact of the wash - which can result in safety issues, environmental damage and financial loss - that a three year project called Research on Passing Effects of Ships (ROPES) is currently underway to identify the full effect of a passing ship's wash and what can be done in terms of port design to mitigate it.

The joint industry ROPES project is made up of approximately 25 members from across the world, including port authorities: the Port of Rotterdam, Port of Amsterdam and Port of Antwerp, and maritime research institutes such as MARIN and Deltares, as well as linesmen, pilots, consultancies, hardware suppliers, and Bechtel, which is the only engineering and construction company involved in the initiative. The research, which started in 2010, is costing €1.5M (US$1.9M) – including a subsidy of €500,000 from the Dutch government – and is being conducted in multiple phases that have included extensive scale-model testing, computer-simulation, as well as full scale testing. While most of the research and testing has been carried out in the Netherlands, some of it has also taken place in the USA and in Belgium.

Waves generated by a sailing ship

The study firstly considered the phenomenon of waves generated by a sailing ship, not just in terms of the primary wave but also the secondary, radiating waves caused and the distribution of hydrodynamic pressure which creates them. The research concentrated on large moored ships in restricted water (ports, canals etc.) and relatively large passing cargo ships. For these ships, the primary wave of a passing ship generally causes the largest mooring line forces and moored ship movements, since a moored ship typically is the most sensitive for waves with wavelengths comparable to its dimensions. The much shorter wash waves generally have less effect on large, moored vessels but passing high-speed ships (eg. ferries) may generate large, secondary waves which can still cause nuisance or damage to small ships or yachts and can affect recreational use of beaches and coastal waters. Large wash waves can potentially also cause coastal erosion and may have a negative impact on marine wildlife. However, the programme focuses on ship induced waves (wash and currents) and does not consider the mitigation of offshore or ocean induced waves.

The next step in the process is the effect the ship induced waves have in a confined waterway, such as a port basin on moored ships along its banks or quays. Based on the distance between the passing ship and the moored ship, the study distinguished three areas – near the passing ship, far-field and near the moored ship - which were relevant to the model and analysed the wash created in these situations. Directly around the sailing ship, the water movement is very complex; the flow around the hull is highly three-dimensional and is determined by factors such as the shape of the hull and the effect of the propeller. Also, for ships sailing under a drift angle, viscous (rotational ie. energy dissipating) effects become more important. At some distance from the passing ship, the influence of viscous effects is negligible and the waves generated may be influenced by external factors such as the harbour geometry (eg. walls, breakwaters), current, wind and non-linear wave effects (breaking, wave-to-wave interaction). The waves reaching the moored ship are generally small but can depend on the shape of the port basin, passing speed and passing distance of ships.

Full-scale tests in the Port of Rotterdam

Testing the effect of a ship's wash on mooring ropes during some full-scale tests

Scale-model tests at the Deltares research institute, Netherlands


Tests at Deltares replicate the effect of a passing ship's wash


Full-scale tests in the Port of Rotterdam

Substantial secondary impact

Although visually, the secondary, smaller waves do not look of much importance, the effect they can cause on the moored vessel, in combination with the inertia of the water masses involved, can be substantial. The fact that it's difficult to spot these effects on the surface was the reason that it has taken the industry some time to really understand the issue. Prior to the ROPES study, some research had been carried out about the effects of wash on an ad-hoc, piecemeal basis using either a theoretical or model approach by for example, port authorities or terminal operators. However, the ROPES framework covers the full range of mathematical modelling, scale-model and full scale tests and brings together most of the original individual investigations, tests and initiators to provide a comprehensive study.

After completing the scale-model tests, computer simulation and full scale testing, the next stage is to analyse all the data collected. The aim of this is to create a computer program to predict the effects of a passing ship, one of the key deliverables of the ROPES project. The software involves mathematic formulae to configure the maximum speed a passing ship can enter or leave a port, based on various factors such as the size and shape of the ship, depth of the port basin, distance from moored ships and other factors such as wind speed etc.

The research reaches its conclusion in November 2013 and will provide new international guidelines to improve port design in relation to passing ships. The output will not only include predictive software but also results of 'reality check' measurement campaigns, assessments of new concepts to restrict moored ships' motions and mooring loads, results of the research to cover missing knowledge; and best practice. Members of the ROPES project will have access to the results and software for three years, until 2016, providing members with a competitive advantage, although there is still time for more members to join the group and receive the full benefits.

ABOUT THE AUTHOR

Marco Pluijm is senior ports specialist at Bechtel and the chairman of ROPES. He has more than 30 years of wide-ranging experience in planning and building ports all over the world. Prior to Bechtel, Mr. Pluijm worked for a port authority, a dredging company, an international port consultancy and the Ministry of Transport in the Netherlands. He has an MSc, civil engineering in port planning from Delft University of Technology and is a member of the Royal Society for Engineers, Netherlands.

ABOUT THE COMPANY

Bechtel is among the most respected engineering, project management, and construction companies in the world. Bechtel operates through five global business units that specialize in civil infrastructure; power generation; communications and transmission; mining and metals; oil, gas and chemicals; and government services.

Since its founding in 1898, Bechtel has worked on more than 22,000 projects in 140 countries on all seven continents. Today, our 53,000 employees team with customers, partners, and suppliers on diverse projects in nearly 50 countries. We stand apart for our ability to get the job done right-no matter how big, how complex or how remote.

ENQUIRIES

Marco Pluijm
Bechtel Ltd
11 Pilgrim Street
London
EC4V 6RN
Email: ports@bechtel.com
For more information on the ROPES project:
www.bechtel.com/safeports

Optimising port investment

Dr Simon Su, director and chief economist, BMT Asia Pacific

Strong growth in many of the emerging markets including the BRIC states (Brazil, Russia, India and China) is reshaping the global economic landscape, changing traditional relations and shifting economic influence from west to east and north to south. As such, new trade patterns continue to develop, namely intra-Asia-Pacific trade, intra-emerging economies trade (eg. China-Latin America) and China-Africa trade. Such diversification is already raising questions and uncertainties in other parts of the world, particularly within European ports, many of which are struggling to remain resilient.

Introduction

Dr Simon Su, of BMT Asia Pacific – a subsidiary of BMT Group, highlights the opportunities, challenges and attributes that ports around the world must consider in order to align with the changing landscape. Through extensive experience of providing investment and planning support throughout the initial stages of infrastructure development, Simon will also provide intelligence on the port investment hot spots and the dos and don'ts for investors.

Yangshan deep-water Harbour Zone, Shanghai Port, China

Credit: Wikimedia Commons

The impact of developing markets

In its latest World Economic Outlook, the International Monetary Fund (IMF) projected that long term growth will remain at a sufficiently healthy level in many of the emerging markets and developing economies. Most notably, real GDP growth in Latin America is expected to accelerate from 3.25 per cent for the second half of last year to 4.75 per cent in the course of the second half of 2013 with Brazil being the main driver for this increase. Developing Asia is also seeing growth accelerations due to a recent boost in approvals for public infrastructure projects in China.

These emerging markets are already influencing trade patterns arguably at the expense of other parts of the world - European ports, which currently find themselves in a somewhat precarious position are a prime example. As these developing economies become more prominent, port investors around the world must recognise the opportunities and challenges and respond accordingly to this changing landscape.

Brazil in particular is already becoming a hot spot for investors due to the Government's recent drive to make it simpler for private investors to become involved in port infrastructure development projects. Supported by strong predicted rates of growth, both the wider Latin American and African markets would, on the surface, also present a strong opportunity for port investors. However, it's important to note that the strong growth prospects are very much long term and in the short term these economies still remain quite volatile, therefore investors must identify and take into consideration any potential risks.

The importance of governments

Governments play a vital role in supporting these types of infrastructure projects where the scope extends beyond merely the development of the port facility itself. For example, in some countries, investors have backed the design and construction of state of the art port facilities only to find that the cargo cannot be effectively transported to and from the port, due to road congestion or poor external infrastructure.

In a bid to attract foreign investment, governments may also provide certain guarantees without duly considering the impact they may have on existing, local businesses. This in turn can create difficult, political situations where promises aren't always kept. Port investors must therefore be cautious and ensure that they carefully research and plan the proposed site options which have been put forward.

Considerations in port planning

Detailed market studies including economic analysis and investment planning which are conducted in the early stages of the process, before purchasing land or equipment, will undoubtedly provide investors with the longer term efficiencies and productivity they strive to achieve. Questions such as what is the economic prospect and industry trend and what is the marketability and the value of the targeted investment will allow investors to determine the local economic growth prospects. With any investment it's vital to know your market. Carrying out due diligence on what type of cargo has the highest growth potential will help identify the types of services and facilities your port needs to offer/put in place to stay ahead of the competition.

Research should also include evaluating the current situation with regards to inland transportation links and competing ports, or other potential port sites. Furthermore, investors must understand the implications of policies affecting trade, such as cabotage, free trade zones or bonded port areas. As the industry develops it is likely that port development will become concentrated in bonded port areas because of the relaxed rules

The Port of Banten, Indonesia

associated with taxation and customs clearance that exist.

By conducting a master plan, investors can also focus their efforts on the port layout, identifying the processes involved in cargo handling and looking at ways of streamlining those processes, in order to deliver greater efficiencies. Of course, in some nations there are certain processes which are beyond your control – such as customs. When faced with this situation, port investors may consider collaborating with the particular customs authority to identify a way of reducing waiting times for example.

The importance of flexibility

To maximise the opportunities and present your port facility as an attractive option to shipping lines, investors need to offer flexibility in the range of vessels it can accommodate, as well as a quick and easy vessel turnaround time. With this in mind, planning and feasibility studies in relation to marine transport and traffic modelling must be carried out to help identify navigational risks and in turn, ensure the port's resources are managed effectively.

When designing a port, flexibility is key. Within the master planning phase, three types of cargo may have been identified as the key markets for a particular port. However, what happens when one of those markets underperforms? Investors are then left with a particular section of their port where activity is slow. Ports can be designed in such a way where areas which aren't performing as well as expected can be converted to accommodate a market that is generating income – such flexibility in the design phase will help to lower the investment risk.

Conclusion

While there are real opportunities for achieving sustainable and long term growth from port investment in emerging markets, all that glitters is not necessarily gold. Before committing to support a scheme it is fundamentally important to carry out a thorough assessment focussing on the three dimensions of port master planning. Economic analysis and investment planning, marine transport and traffic modelling will ensure that all appropriate scenarios are considered and all relevant risks are mitigated against as part of due diligence prior to any formal agreement.

ABOUT THE AUTHOR

Dr Simon Su, Director & Chief Economist at BMT Asia Pacific, with more than 18 years' industry and research experience in port and transportation consulting industries, Dr Su leads BMT's regional branch's global economic team to support multinationals, governments, investors and leading corporations with state-of-the-art strategic advice, innovative thinking and effective solutions. Dr Su has managed many high-profile studies and is an expert on operational and planning issues for logistics related sectors. Dr Su holds a PhD in Economics from University College London, an MBA from Imperial College London and an MSc in Economics from Warwick University of the UK. Dr Su is also an EEP graduate from Harvard University.

ABOUT THE COMPANY

Based in Hong Kong, **BMT Asia Pacific Ltd** is an independent consultancy providing specialist economic, environmental, risk and marine technology services. The company offers innovative and objective support to the planning, design and operation of projects throughout the Asia Pacific region.

ENQUIRIES

BMT Asia Pacific
5/F, ING Tower, 308 Des Voeux Road, Central, Hong Kong
Email: post@bmtasia.com.hk or
sis@bmtasia.com.hk (Simon Su's email address)
Web: www.bmtasiapacific.com

Container Handling

Section sponsored by:

LIEBHERR

Grounded and chassis container terminal operations

Dr Jean-Paul Rodrigue, Hofstra University, New York, USA, and **Mark Booth**, CPCS Transcom Limited, Ottawa, Ontario, Canada

Introduction

This article summarises some of the findings of a 2012 report by CPCS Transcom, InterPro Advisory, Prime Focus and Jean-Paul Rodrigue in the 'Guidebook for Assessing Evolving International Container Chassis Supply Models', Transportation Research Board, National Cooperative Freight Research Program.

The chassis in container terminal operations

Ocean container chassis have a critical function in the movement and storage of full and empty marine containers. A container chassis is a wheeled structure designed to carry marine containers for the purpose of truck movement between terminals and shipping facilities. It is a simple electromechanical device composed of a steel frame, tyres, brakes and a lighting system. Storage in container yards can be grounded where containers are stored by stacking them upon one another, or wheeled with containers stored on chassis.

Grounded container terminal operations are the standard model around the world. In such a setting, containers are stacked on the terminal yard, using equipment such as rubber-tyred gantries (RTGs) or straddle carriers. One key advantage of grounded operations is much higher storage density (see Figure 1). Wheeled operations usually transfer containers with one lift, but require a significantly larger fleet of chassis, more land to store chassis, and containers on chassis (see Figure 2). Usually, there is also more yard tractor time and mileage driving to and from the storage area.

Empties are commonly kept in a specific part of the yard and often as an off-site empty container depot, which in this case requires a chassis for drayage. At some wheeled terminals in the US, container/chassis pairs are parked at an angle of about 60 degrees so they can be stored closer to another while a truck can easily back up for delivery or pick up.

Many terminals are neither all-wheeled, nor all-grounded (stacked) operations. First, several maritime terminals are using chassis for movements between the crane and the yard. This confers the benefit of high stacking density as straddle carriers are limited to three or four containers in height when not used to bring containers to RTGs. Second, a share of a grounded terminal's space is usually reserved for wheeled operations such high-priority cargo, hazardous or refrigerated cargo. It is common for containerised hazmat cargo to be required by law to be wheeled to avoid the risk of stacking damage and leaks. Ultimately, wheeled terminals switch to stacked operations when they run out of space to park chassis/containers, or when they run out of chassis, but otherwise maintain the share of wheeled operations that space will allow to maximise throughput.

Chassis use can be very different between port and rail operations. In terms of container pickup, the railroads generally have shorter free time allowances (24 to 48 hours versus four to five days), which results in shorter chassis dwell times. The volume and nature of container flow (the peaks and troughs of chassis demand) also differ at wheeled marine and rail terminals. For example, a large marine terminal may unload 3,000 containers onto chassis from each of the three vessels calling in a week, while a large rail terminal unloads up to 240 containers in the case of a full double-stacked unit train to chassis for each of the ten inbound trains a day.

Wheeled terminal operations are also constrained by chassis flips, which occur when there is a need to transfer a container from the chassis it is resting upon to another chassis. This may take place for several reasons, notably when the chassis is found to be defective, the container is too heavy for the chassis, the chassis cannot leave the terminal (eg. belongs to the terminal operator) or because the motor carrier brings his own chassis. The incidence rate of chassis flips performed at marine and rail terminals varies, but is generally in the order of about 5 per cent of the total volume of intermodal transfers. Improper storage of overweight cargo on standard chassis

Figure 1: Grounded container terminal operations, ICAVE Terminal, Port of Veracruz, Mexico

Figure 2: Wheeled container terminal operations, APL Terminal, Port of Los Angeles. Source: Google Maps

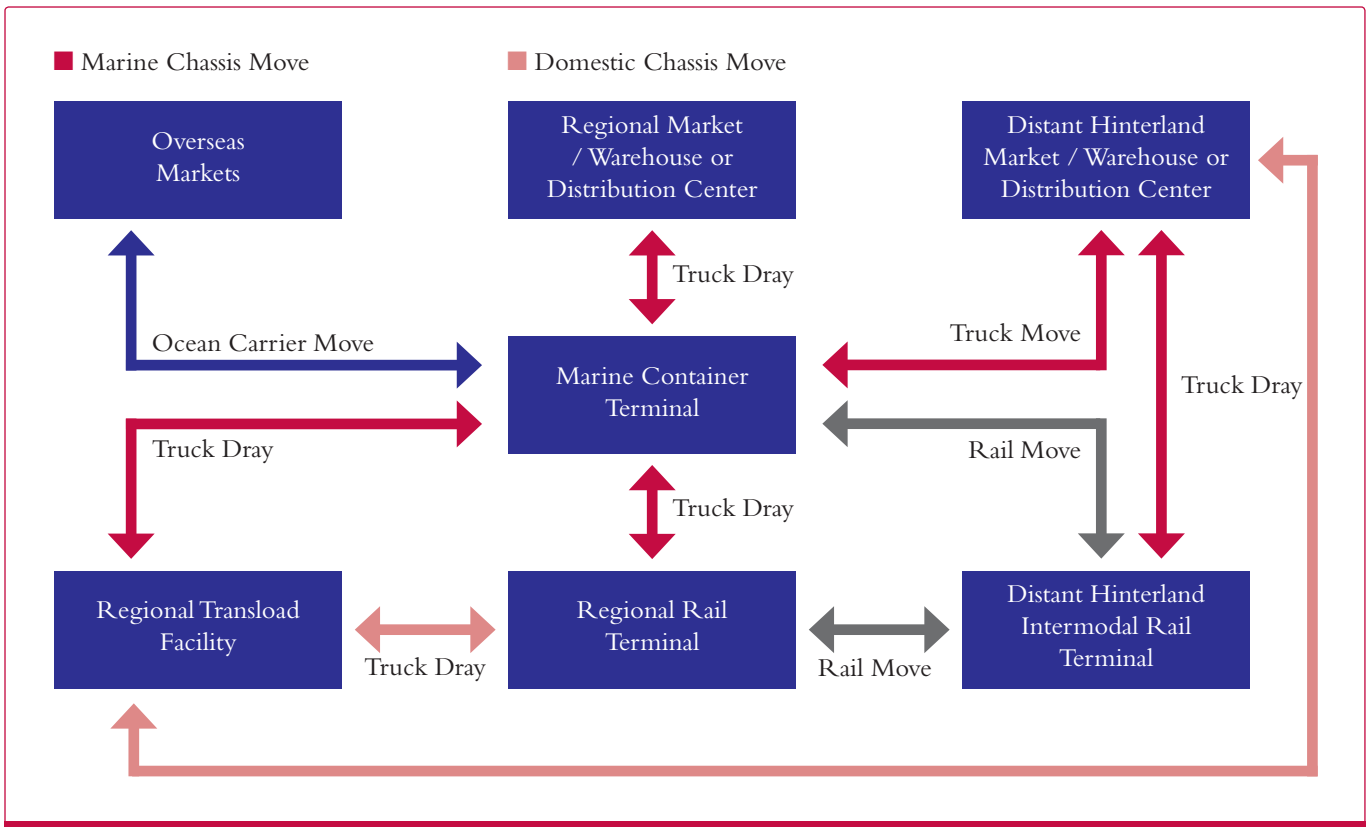

Figure 3: Chassis use in containerised freight

or storage of boxes on defective chassis may be a problem relegated to wheeled operations but are not unavoidable with better yard management systems.

Chassis fleets

There is no centralised source of data on global or regional chassis fleets. The total US chassis supply is estimated to be around 725,000 units, of which 565,000 are ocean container chassis and 160,000 are domestic container chassis. It is roughly five times that of China, and likely more than twice the combined supply of East Asia, this despite the latter's container throughput being significantly larger than that in the US. A possible explanatory factor behind the lower supply of chassis in Asia concerns drayage distances and the nature of economic activities. The export-oriented economic development model has favoured the location of factories close to marine terminal facilities. Drayage distances are relatively short and containers are loaded/unloaded immediately, with the tractor remaining hooked to the chassis and the driver waiting until ready for a next move. In this context, the utilisation level of chassis assets is therefore higher.

In Europe and Asia chassis are supplied primarily by motor carriers, logistics companies/3PLs, and to a lesser extent leasing companies through long-term leases to trucking operators. In these markets, motor carriers operate the truck and chassis as a single, unattached asset. This arrangement is taking hold in some markets in the US, but remains marginal.

In some jurisdictions, including Europe, terminals also own their own chassis fleet; these chassis are used for internal terminal operations only (shunters) and are not roadworthy.

Chassis and the hinterland

With respect to the movement of containerised imports and exports, Figure 3 highlights the transportation moves in which the chassis is involved (red arrows). A chassis is involved every time an ocean container moves by truck, irrespective of the type of move. Likewise, a domestic chassis is involved every time a 53' domestic container moves to and from a terminal. The use of a transloading facility where the contents of three maritime containers can be transloaded into two domestic containers results in the shift from a maritime to a domestic chassis.

The term 'carrier haulage' is used when the drayage of a container, and by extension a chassis, is arranged by and under the control of the ocean carrier. The term 'merchant haulage,' in contrast, is used when the cargo owner arranges the drayage move with its preferred motor carrier, which must source, in one way or another, a chassis for the related move. In Europe, the majority of ocean containers are carried gate to gate (merchant haulage) and either gate to ocean terminal gate for local (truck) delivery or inland rail terminal gate in the case of railed containers. In parts of Asia including China, Hong Kong and Japan, on the other hand, carrier haulage can be much more common, between 70 per cent and 75 per cent, although in other Asian countries, including Vietnam and Thailand, merchant haulage is more typical.

The unique American chassis model

The unique American chassis model evolved from shipping lines looking to differentiate themselves in the early days of containerisation. Lines would supply chassis for a complete carrier haulage service. The service intertwined them into the supply chains of their customers, because in addition to the chassis' role in drayage operations, the chassis also provide a storage function, which is largely unique to the US.

This takes place in two ways. Firstly, at a terminal site, containers are stored on a chassis until ready for pickup. Wheeled facilities are most typical of rail terminal operations. Also, the shipper's facility containers and the chassis on which they rest are often unhooked from the tractor and left at the shipper's facility for unloading and picked up later (drop and hook operation). In some instances, the container and chassis can be left at a shipper's facility

SIEMENS

siemens.com/cranes

Making a crane control reliable and flexible

Preconfigured crane control modules to automate and control any crane

Siemens forged 90 years of worldwide experience in a ready-to-run crane control platform which contains configurable standard function modules. These modules are integrated within a SIMOTION D controller: the most performant motion controller available on the market.

With SIMOCRANE, we provide 'off the shelf' proven technology to secure reliable crane performance, simple engineering and fast commissioning. Besides all the proven crane control solutions in SIMOCRANE, you still have the flexibility to customize the solution to meet your requirements.

Answers for industry.

for a prolonged period of time (dwell time), thereby representing additional storage space at that shipper's facility, and providing the shipper the option to have different drayage operators dropping and returning cargo, as the motor carrier does not own the chassis.

One salient factor is the greater prevalence of wheeled operations at rail terminals than at marine terminals. On the whole, rail terminals make up the majority of wheeled operations, with marine terminals increasingly grounded partially, if not totally, making grounded the more predominant model on the whole. Most rail terminals have to handle both TOFC (trailer on flat car) and COFC (container on flat car) services. Wheeled terminals are a legacy of handling trailers, which accounted for over 70 per cent of the market as recently as the early 1980s.

An important shift in the composition of the North American intermodal rail fleet took place in the late 1980s and early 1990s. The development of long distance corridors linking major port gateways such as Los Angeles/Long Beach to inland destinations incited the setting of double-stacked unit train services and a shift toward double-stacked COFC. The TOFC services that used to dominate became marginal. The main reason relates to a more efficient usage of rail assets permitted by double-stacked services as well as the commitment of trucking companies to integrate their drayage services with long distance intermodal rail services. What used to be carried as TOFC (without the use of a container chassis) is now carried as COFC (with a drayage segment) for the first/last mile, using a chassis.

Moreover, wheeled terminals were possible on port lands decades ago, but the expedience of priority wheeled service is now at odds with the desires for increased density and grounding. Because of the still low density of the US relative to Europe inland terminals still allow large plots for wheeled chassis storage and a reduced imperative for grounded operations at inland rail facilities.

The future of the container chassis

Around the world, the chassis remains a crucial component of intermodal transport chains. Their role in terminal operations is in decline, notably in North American rail terminals that are switching to grounded operations, particularly at new facilities, though not as quickly as some proponents would hope to see, with extensive wheeled facilities such as UP's Joliet terminal still being commissioned in recent years. The setting of inland terminals is also switching chassis drayage operations further inland which usually involves shorter distances and thus less chassis; that same chassis gets a higher utilisation level.

Additionally, maritime shipping companies which have conventionally provided chassis in many American port terminals are pulling out of the chassis business, which is switching to various types of chassis pooling arrangements, as motor carriers as an entire industry are not capable to perform a wholesale conversion to owning chassis fleets, as well as the maintenance implications of removing chassis inspection and maintenance from the jurisdiction of port labour.

On the medium term, a convergence towards the global standard of motor carrier provided chassis is likely to take place, though in the US the misalignment of interests across all parties in the supply chain from ocean carrier to customer are not yet remedied in any fashion. Eventually, grounded terminal operations will emerge as the dominant paradigm with wheeled operations serving niche functions such as high priority cargo, reefers and hazmat.

ABOUT THE AUTHORS

Dr Jean-Paul Rodrigue is a professor at Hofstra University, New York. His research interests mainly cover the fields of economic and transport geography as they relate to global freight distribution. Area interests involve North America and East and Southeast Asia, particularly China. Specific topics on which he has published extensively cover maritime transport systems and logistics, global supply chains and production networks, gateways and transport corridors, international trade and regional development.

Mark Booth is a senior consultant at CPCS, a management consulting firm focused on transportation strategy based in Ottawa. He has completed a diverse array of engagements dealing with multimodal freight transportation in Canada and the US, including multiple engagements for the Transportation Research Board. Internationally, his work has consisted of financial modelling support for transaction advisory and feasibility studies.

ABOUT THE ORGANISATION

PortEconomics is a web-based initiative aiming at generating and disseminating knowledge about seaports (www.porteconomics.eu). It is developed and empowered by the members of the PortEconomics group, who are actively involved in academic and contract research in port economics, management, and policy. Since October 2012, Port Technology International and PortEconomics are engaged in a partnership.

ENQUIRIES

Dr. Jean-Paul Rodrigue
Dept. of Global Studies & Geography - Hofstra University
Hempstead, New York (United States)
Email: jean-paul.rodrigue@hofstra.edu

Mark Booth, MBA
Senior Consultant, CPCS
Ottawa, ON (Canada)
Email: mbooth@cpcstrans.com

Container weighing service to shipping lines

Beat Zwygart, director, Lasstec, Sciez, France

The International Maritime Organization (IMO) is expected to make the weighing of sea containers mandatory. The purpose is to make the entire container supply chain safer. This regulation is expected to be issued through the International Convention for the Safety of Life at Sea (SOLAS Convention) as a result of a number of accidents involving container losses and container stack collapses. The existing SOLAS regulation already obliges shippers to declare the correct container weights, but this is not always done. The new regulation is likely to require specifically that the container is actually weighed or calculated by reference to the contents, packing and securing materials and the tare weight of the container itself. Importantly, however, the regulation is anticipated to forbid the loading of containers unless the verified gross mass is available to the terminal and the ship's master.

Practically speaking this means that the shipping lines may require terminals to verify container weights prior to being loaded onto their ships. There will, however, be a cost to it which the shipping lines are likely to pass on to their shippers.

But besides added safety, there is another important aspect: optimising ship stowage which should reduce fuel consumption for the shipping lines. A ship is more stable at sea and consumes less fuel when the center of gravity is low and if the cargo is optimally distributed. Therefore, it is in the interest of the shipping lines to know the exact weights. Arguably, there are multiple aspects which determine fuel consumption of a ship, and some may be more important than stowage, but this is nevertheless a factor.

Determining container weights and related costs

First of all, to weigh a container and to use the load information to update the stowage plan, containers need to be weighed preferably at the completion of packing. Clearly, weighing export containers needs to be done sufficiently in advance for the stowage plan to be optimised. If the actual weight is not determined at the completion of packing, the port is in a prime position to provide this service or, indeed, to verify the documented weight. For containers that arrive at the port by road, rail or river an obvious 'check point' is during the inward process. Weighing with the quay side crane is too late, since the container position on the ship is determined well before loading.

Weights of transshipped containers should be verified at the original port of loading, but there will always be situations where this has not been physically possible. In that event, it can be said with certainty that every container, whether exported or transshipped, will pass through the stacking yard. It is therefore argued that equipping the stacking cranes with weighing systems best caters for all circumstances.

Operators in those countries that require imported containers to be weighed may consider weighing with quay side cranes as well.

What does it cost to weigh a container? Let's base the calculation on the capacity of a quay side crane which can typically load 100,000 twenty-foot equivalent unit (TEU) per year. Let's also assume there are three rubber-tyred gantry cranes (RTG) or rail-mounted gantry cranes (RMGs) required per quay side crane. Let's further assume a weighing system costs US$20,000 per stacking crane and it is amortised over three years. The cost per year to weigh 100,000 TEU is therefore US$0,20 per TEU. In addition to the capital expenditure for the weighing equipment, the terminal will incur some integration costs plus ongoing maintenance and administration costs, so let's double this amount to US$0,40 per TEU. Weighing by the stacking cranes during the handling of the containers is also more economical than weighing with weigh bridges which very often involve manual intervention, when trucks are carrying two 20 foot containers which need to be individually weighed. Weighing in the stacking yard is therefore the fastest, most economical and non-disruptive way to the operation. Some terminals have calculated that they could offer their weighing services for US$1 per TEU and earn a profit with it.

The cost to a shipping line

A ship with a capacity of 8,000 TEU consumes 225 tonnes of fuel per day at a sailing speed of 24 knots. The price of bunker fuel end of 2012 was at around US$600 per tonne. For a journey of 21 days, the ship will therefore consume US$2,8 million worth of fuel. The charge by the terminal for verifying the container weights of this ship would be US$8,000 or 0,3 per cent of the total fuel burned over the 21 days. To put the weighing charge in perspective of the fuel cost, it will be equivalent to less than 90 minutes of sailing time. The question to ask now is how much fuel the ship can save if it is optimally loaded? If the fuel saving exceeds the cost of verifying the container weights, then it should be in the interest of the shipping line to buy the weighing service from the terminals. Thus, arguably, while the terminals should be compensated for providing this new service, the overall cost to shipping may be negligible.

There are several possible methods of weighing containers. We already talked about weigh bridges at the entry of the terminal. They are potentially the most accurate, but they are not conveniently situated for transshipped containers. Moreover, users need to take account of continuing maintenance and calibration costs and in particular the additional labour costs to weigh containers separately if a single truck arrives with two 20 foot boxes.

Stacking cranes very often have weighing systems on the trolleys or rope anchors. They are less accurate and where cranes are equipped with twinlift spreaders these systems cannot weigh each box individually. Lasstec based in France, has developed a weighing system with a fibre optic sensor bonded into the centre of the twistlocks. The system allows the weighing of containers during the loading cycle so not to disrupt the work

A ship is more stable and more fuel efficient when cargo is optimally distributed

Inside the system

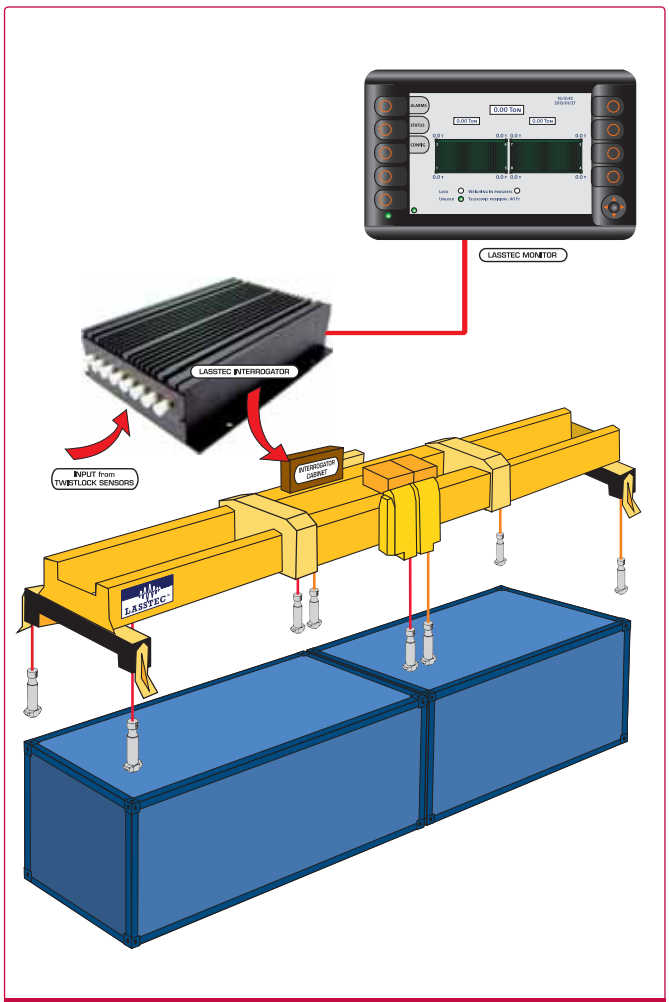

LASSTEC container weighing system

flow. The system can be installed easily into any existing or newly built spreaders.

Accuracy of weighing systems

The accuracy of the Lasstec system is +/-200 kilogrammes per container which represents +/- 0.5 per cent at a container load of 40 tonnes. This accuracy cannot be improved, because twistlocks are 'pendling' and not always absolutely vertical in the spreader when picking up a container. IMO has not yet decided about any required accuracy in the upcoming regulation, but discussions talked about +/-1 per cent. The accuracy of the Lasstec system therefore exceeds this requirement.

As to the recalibration requirement of a weighing system, the Lasstec system is set to zero with each twistlock unlock- and locking cycle. It therefore does not require any recalibration throughout the life of the twistlock.

One advantage of this system is that the sensors can be installed in any standard type of twistlock. The only modification is drilling a tiny hole through the centre line of the twistlocks, which has no effect on their structural integrity and adding a data processing unit to the spreader. Several spreader makers offer their twistlocks now with the holes already drilled in their twistlocks. For those who don't, Lasstec can provide twistlocks with the holes drilled and load certified.

Lasstec's original system was introduced three years ago and has already acquired a wide user acceptance and reputation in the marketplace. The latest sensors are built with a stronger twistlock mounting, and a reinforced, flexible, plastic-coated steel tubes which provide the sensors with long life and optimum shock and vibration resistance. To ensure unconditional reliability, they have been exposed to several thousand severe shock-load cycles, over one million twistlock lock/unlock rotational movements and over two million 0 to 10 tonnes load cycles. In addition, these sensors can measure overloads far beyond 100 tonnes. In summary, Lasstec sensors outlive the twistlocks in every type of application.

Next steps

December 2012, Lasstec booked the first large order for a new terminal project of over 50 twin lift systems. The systems will primarily be used for weighing containers, but since the project is for automated stacking cranes, they will also provide a wide range of safety functions.

For example, the system can provide an alert where the container is overloaded; it is eccentrically loaded; a twistlock is not engaged and not carrying a load; a trailer lifting situation is encountered. And where a snag load occurred on board a ship, or a container dragging situation is detected (in case a twistlock does not disengage from a corner casting after positioning a container onto a stack).

In addition, the system provides the following interactive information:

- Real time weights
- Stabilised container weights
- Peak and shock loads when a container is picked up (for maintenance purposes of the twistlocks and spreaders).

The system runs independently from the spreader programmable logic controller (PLC). It can be supplied with a

Detecting a trailer lifting situation

monitor in the crane cabin (as shown in the "Lasstec container weighing system" illustration) which displays load information and alarms. It has the capacity to store 10 years of history data which can easily be downloaded to a memory stick for further analysis or reporting requirements.

From the cabin, the data is sent into the crane and yard equipment PLC from where it can be transmitted into the terminal operating system (TOS). Thus, not only is every load cycle recorded, but the system is also ready to be integrated into other processes that will be necessary to comply with the forthcoming container weighing regulation.

ABOUT THE AUTHOR

Beat Zwygart is Managing Director of Lasstec and has patented and developed Lasstec, a container load weighing and accident prevention system using the spreader twistlock as a load cell. The twistlocks are equiped with an innovative sensor which allows to determine container loads and eccentricities and to improve operational safety in container handling. Prior to establishing Lasstec in 2006, Beat Zwygart was the Director of the marketing company of ELME's crane spreader division which he founded in 1994 together with the Swedish mother company. Before to joining ELME, Beat was 17 years with Caterpillar where he had several managerial positions in Geneva Switzerland, the USA and in the Middle East, mostly for products used in the Container Handling Industry. Beat ZWYGART was born in Switzerland and has a degree in Mechanical Engineering. He is also a member of the ICHCA Safety Panel and of PEMA.

ABOUT THE COMPANY

Lemantec International Sarl patented the Lasstec (Load And Strain Surveillance Technology) load-sensing and accident prevention system in 2006. The product is now marketed under the brandname Lasstec by the company Lasstec Sarl.

ENQUIRIES

Lasstec Sarl
94D Av du Cretollier
74140 Sciez
France
Tel: +33 (450) 267 460
Fax: +33 (450) 268 592
Mobile: +33 (608) 637 060
Web: www.lasstec.com

The merits of vertical-automated container terminals now proven in Asia

Peter Slootweg, chief commercial officer, BNCT, Korea

Introduction

Asia's first vertical-automated terminal shows its merit by proving all the advantages of its design within the first year of operation. Since the first vessel call on 28 January 2012, Busan New Container Terminal (BNCT) has had a quick, successful and smooth operational start in large part due to the advantages of its vertical-automated terminal design and latest technology to match. Thanks to an initial volume of 1.2 million twenty-foot equivalent units (TEU) annualised, this terminal has already demonstrated world class productivity, highest safety levels, shortest truck turnaround times, excellent yard efficiency and environmental advantages compared to traditionally structured terminals and is quickly gearing up to be a leading terminal in Asia.

World-class productivity

The terminal is ready to make the jump in productivity that vertical-automated terminals are designed for. The entire facility and equipment are performing smoothly with no serious issues or failures to date. BNCT demonstrated very high performance for a brand new terminal delivering 22 moves per hour on the first vessel and now exceeding 30 moves per hour with the highest berth productivity achieved to date of 188 moves per hour.

BNCT's vertical-automated structure creates buffers in the container handling process which de-links equipment. Automatic rail mounted gantry (ARMG) cranes, straddle carriers and quay cranes essentially do not have to wait for the next or previous piece of equipment in the container handling process to start or finish working. With this flexibility, we can immediately respond to changing circumstances or customer requests at any point in the process without affecting other parts.

The most exciting part about reaching this level of productivity through practice and optimisation of our system during our first year, is that BNCT is now ready to implement one of the biggest operational advantages of vertical-automated terminals - double cycling.

Double cycling is the simultaneous loading and discharging of containers in the same cycle by both quay cranes and straddle carriers. Currently being practiced on selected vessel calls, full implementation of double cycling will deliver a big jump in productivity for large high-volume services.

Vertical layout also maximises yard efficiency with less distance for equipment to travel and minimises yard congestion.

Highest safety levels and more environmentally friendly

With the latest software and automation features to enhance equipment efficiency and utilisation, BNCT is raising environmental standards to a new level. With no trucks or people in the yard it is easy to see that chances for accident or injury and emission of pollutants and greenhouse gases are drastically reduced. BNCT's advanced software optimises yard and equipment planning which reduces wasted energy significantly.

Shortest truck turnaround time

Due to the vertical layout, automated yard and proximity to our gate, the travel distance for trucks is significantly shorter than conventional terminals. External trucks spend less than 15 minutes at BNCT to deliver or pick up containers. Also, the 114 truck landside transfer points ensure a constant flow of traffic away from the operational yard area.

BNCT's operation in action

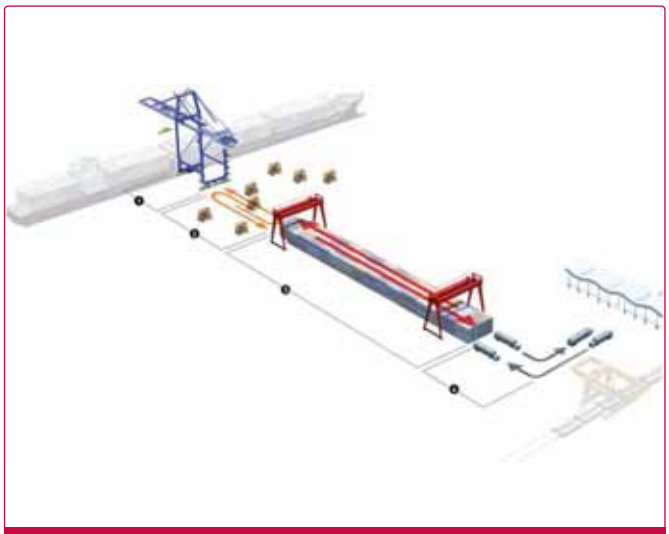

BNCT's vertical-automated terminal structure

BNCT's automated activities reduce accidents and pollution

BNCT can perform double cycling processes

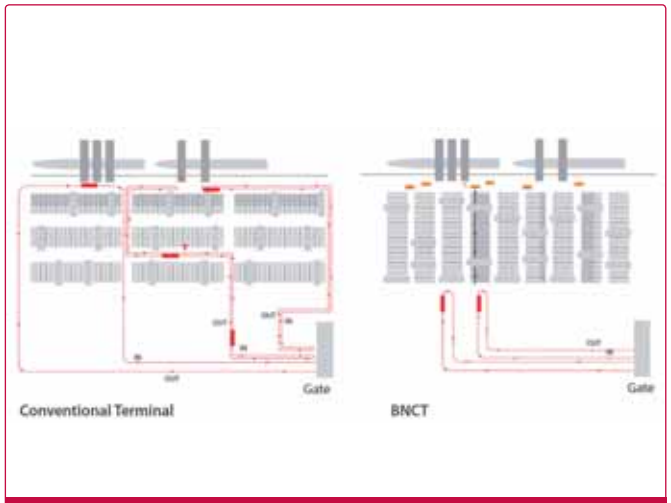

Traditional versus vertical truck paths

BNCT's highly efficient system

Highly efficient automated yard

At the heart of the terminal is a fully automated container stacking area which uses 38 ZPMC 40-tonne ARMC cranes with automation technology from ABB. Each yard block has two ARMGs spanning 10 rows, which can lift containers one over five. To avoid collisions, each machine is equipped with infrared detection devices that can be adjusted to detect the other machines working in the block from a distance of three to 30 metres. The system also allows close working of the cranes.

Laser scanning, which is installed on the trolley, verifies the given block map data (height and length) for each stack and provides the crane with the requested offset values between the nominal target position of a box and its actual measured position. When the yard equipment is not busy loading or discharging containers, our automated system carries out housekeeping, by automatically moving containers to the ideal position. This function enhances productivity and ensures more efficient operation at peak times.

The automatic yard stacking system (export decking) for inbound containers and the terminal operating system (TOS), automatically assess the vessel, gate and yard status. Each helps us to increase productivity and flexibility, allowing us to respond instantly to our customers' changing needs. The adoption of the vertical layout to make the best use of the yard stacking area also saves on manpower. We are decreasing the number of additional yard lanes needed for phase two expansion which will add another 1 million TEU capacity in 2014.

ABOUT THE AUTHOR

Peter Slootweg is chief commercial officer at BNCT, Korea's newest and Asia's first vertical-automated container terminal in Busan's, New Port. He led BNCT's transition from a project to an internationally-recognised and customer-focused business realising an annualised volume of 1.2 million TEU within the first year of opening. Bringing experience from multiple industries ranging from oil and gas, automotive manufacturing to HR consulting and advertising, Mr Slootweg has been in the container logistics industry since 2006. Before joining BNCT in October 2011, Mr Slootweg performed in global roles at APM Terminals and Maersk Line and, during the recession, was CCO of Gateway Terminals India in Mumbai for three years.

ABOUT THE ORGANISATION

BNCT Co. Ltd. is an independent full-service container terminal in Busan's New Port in South Korea with an initial capacity of 1.8 million TEU increasing to 2.7 million TEU by 2014. BNCT can berth four of the world's largest container vessels simultaneously at 1,400 metres of quay with 16-17 metres water draft. It has the biggest, most technologically advanced equipment supported by the most modern terminal operating system and industry leading automation technology.

ENQUIRIES

Tel: +82(0)51 290 8811
Fax: +82 (0)51 290 8820
E-mail. peter.slootweg@bnctkorea.com
Web: www.bnctkorea.com

Seismic considerations for existing quay cranes

Michael Jordan, Yoshi Oritatsu and **Erik Soderberg**, Liftech Consultants Inc., Oakland, CA, USA

This is the last article of a three-part series on quay crane seismic issues. The initial article in the first summer 2012 edition of Port Technology International, 'Seismic protection of quay cranes,' addressed the application of friction dampers in quay cranes. The next article in the second summer 2012 edition, 'Seismic considerations for new quay cranes,' presented several design approaches to improve the seismic performance of new cranes. This article looks at existing quay cranes and presents several seismic retrofit options for existing cranes.

Seismic issues with existing cranes

Since the introduction of the first quay cranes in 1959, cranes have usually been designed for lateral seismic forces equal to 0.2 g, and elastic response. This design criterion was acceptable for many years because cranes could lift off the rails at low lateral inertia loads without damage. Lifting from the rails limits the seismic response and forces that develop in the structure. Historically, small existing cranes have performed well in earthquakes for this reason.

As crane sizes have increased, the traditional seismic design criteria are not suitable. Large modern cranes require up to 0.6 g of lateral inertia before they lift off the rails. Such cranes designed to traditional criteria are likely to perform poorly even in moderate earthquakes. This is particularly of concern for cranes located in low wind speed regions where wind design loads are less severe than the traditional seismic design load.

Is seismic retrofit necessary for existing cranes?

Most building codes do not require improvement of an existing structure to meet current codes unless an alternation to the structure increases the seismic loading or reduces the strength of the structure by 10 percent or more. This is reasonable, as the cost to modify an existing structure is typically much greater than for new construction. While no such requirement exists for cranes, we believe a similar logic is appropriate. Regardless, it is important that stakeholders understand the expected performance of their existing cranes and the seismic risk so they can make an informed decision.

In the previous article, the concept of balancing risk and performance for new cranes was presented. The same idea applies to existing cranes. By adding the cost of doing something now, i.e., retrofit cost, and the cost associated with risk, i.e., damage cost, the evaluation of whether retrofit is worthwhile becomes clearer. This is demonstrated in Figure 1 with the points explained as:

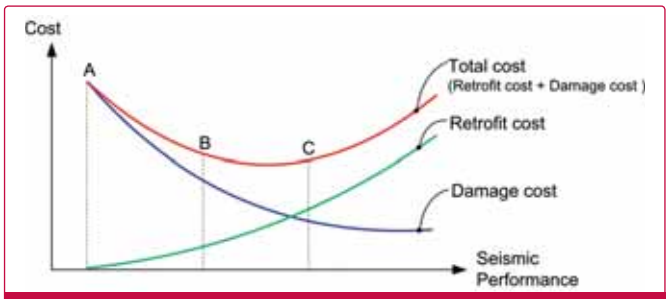

Figure 1: Retrofit cost and damage cost curves

- Point A: No seismic retrofit. The risk of damage or damage cost equals the total cost.
- Point B: Some retrofit. The retrofit reduces the risk of damage or damage cost. The total cost is reduced from Point A, but could be reduced with more retrofit.
- Point C: More retrofit. The cost of retrofit begins to exceed the reduction in the risk of damage or damage cost. Less retrofit results in less total cost.

The cost associated with retrofit will eventually outweigh the benefit, as in Point C. There is an optimal seismic retrofit level where the total cost is minimised. Stakeholders can use this method to decide if and how much retrofit is worthwhile.

Retrofit options

There are several approaches to improve seismic performance for existing cranes. One approach is to strengthen the lower portal frame with diagonal braces such that the legs can lift off the rails, allowing the crane to rock without damage. A second approach is to stiffen the lower portal frame so it can deform plastically in a controlled manner without collapse. A third approach involves adding a seismic isolation or energy dissipation device to reduce seismic forces. The approaches are summarized in Table 1.

TABLE 1: RETROFIT OPTIONS

Option	Advantages	Disadvantages	Comment
Strengthening for rocking	Structure can tolerate large lateral load without damage	Imposes large lateral loads on wharf	Least costly if clearance under portal can be decreased
Stiffening for ductility	Maintains portal clearance	Plastic yielding will require repairs after a design event	Can also strengthen portal frame to tip without damage
Installing isolation or dampers	No significant damage, limits lateral loads on crane and wharf	May be expensive to implement	Requires testing of special devices

Experience the progress.

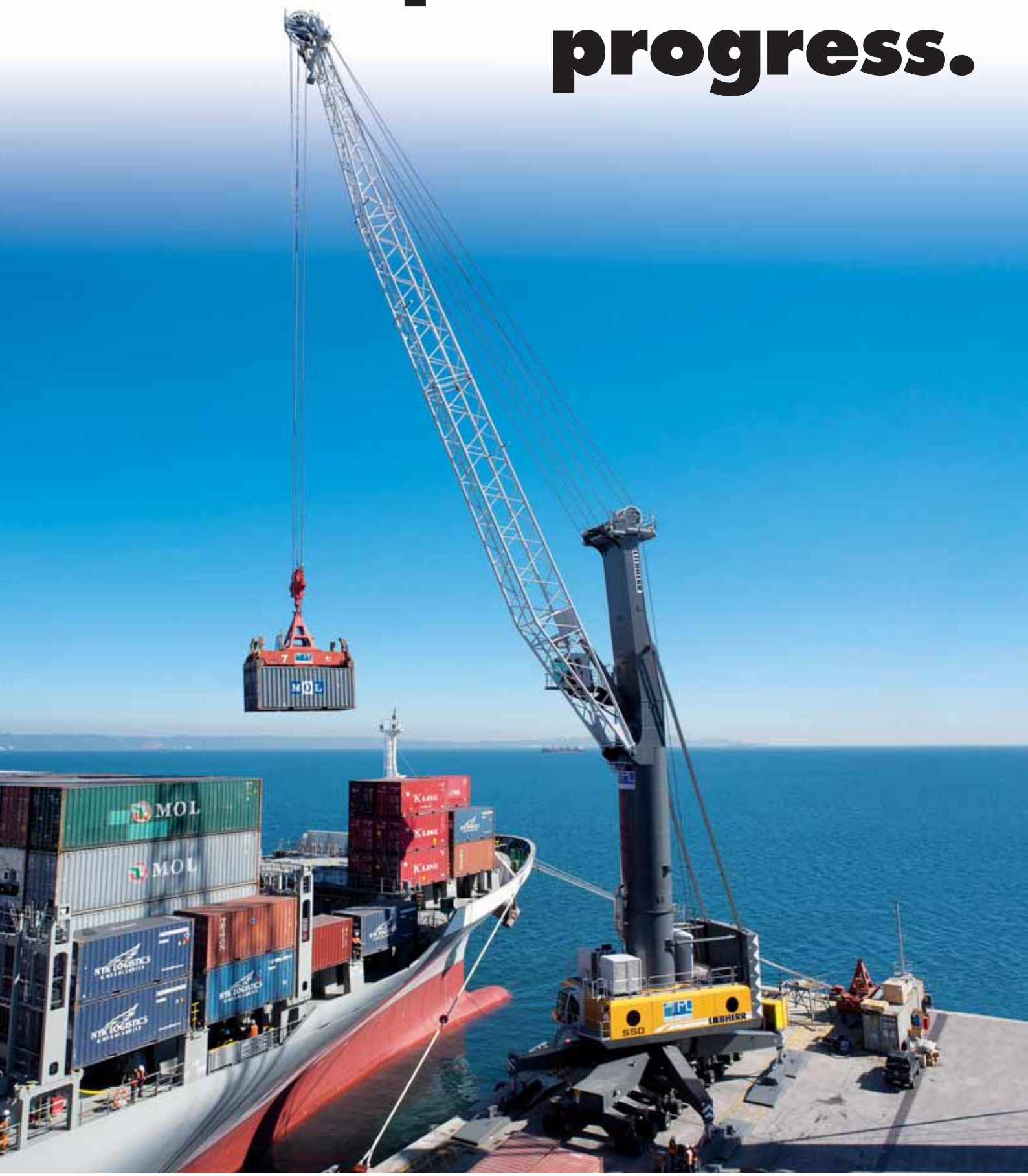

Liebherr-Werk Nenzing GmbH
Dr. Hans Liebherr Str. 1
6710 Nenzing/Austria
Tel.: +43 50809 41-725
mobile.harbour.crane@liebherr.com
www.liebherr.com

LIEBHERR
The Group

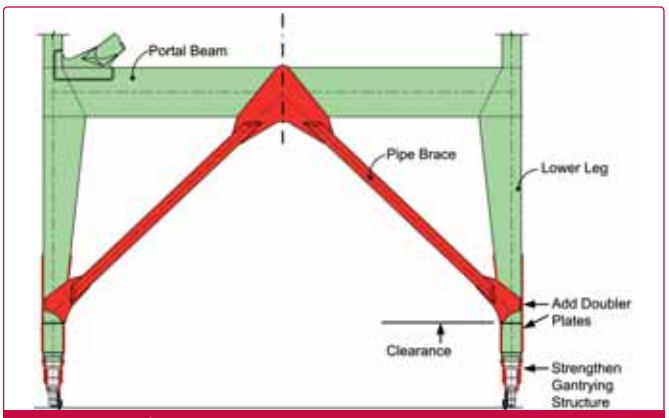

Figure 2: Portal frame pipe brace strengthening

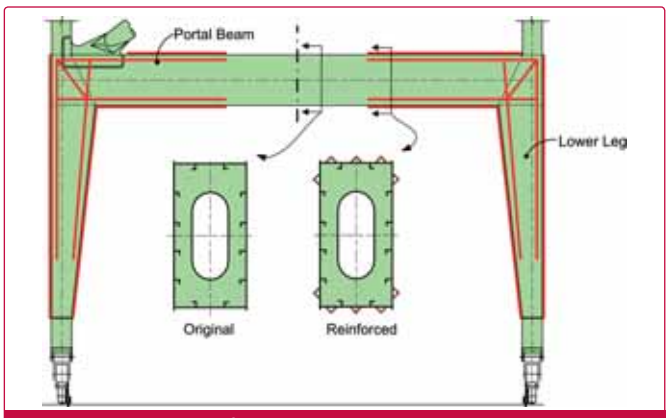

Figure 3: Improved portal frame ductility

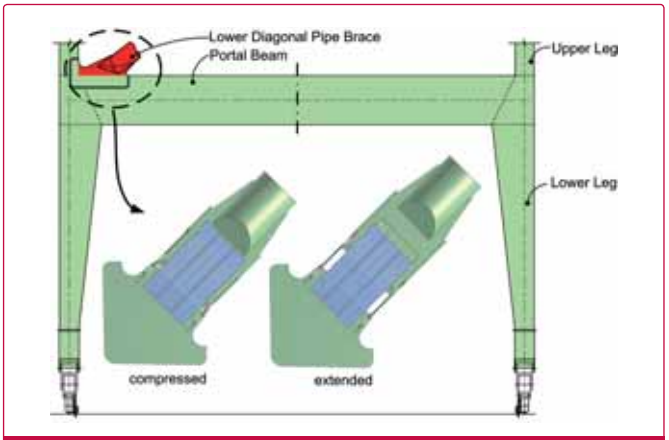

Figure 4: Friction damper

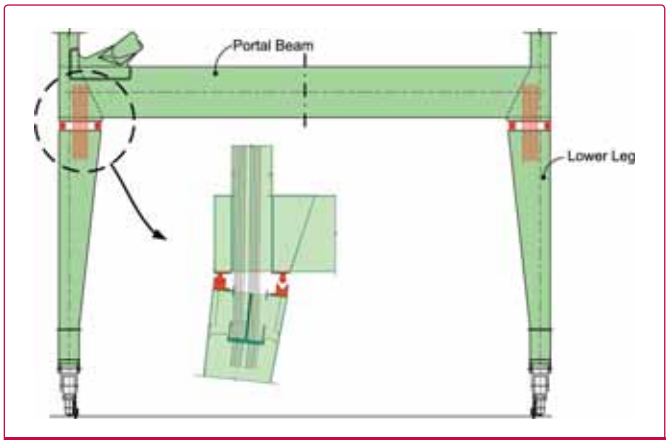

Figure 5: Isolation hinge modification

Strengthening for rocking

Modifying an existing crane to rock is most worthwhile if the portal clearance can be reduced and braces installed as shown in Figure 2. The modification involves installing four pipe braces from the lower end of each leg to the centre of the portal beam. The area where the new diagonal pipe braces frame into the legs, including the gantrying structure, may also need strengthening.

The modification is estimated to take roughly one month of downtime and cost about US$300,000 per crane for construction not including design and loss of operation costs. This modification is not an option where straddle carrier or RTG operations occur, or when the vertical or lateral load capacity of the wharf is limited.

After the modification, the crane frame will remain elastic in earthquake events. Operations can resume soon after an earthquake. The crane may need to be reset onto the rails; however, this can be done relatively quickly.

Stiffening for ductility

Modifying an existing crane for ductile response is most easily done by adding external stiffeners as shown in Figure 3. The modification involves installing additional stiffeners along lower legs and at the ends of the portal beam where large forces and moments due to seismic loads are expected. The additional stiffeners increase the buckling resistance of thin plates, allowing the stiffened steel plates to yield and undergo large strains before the plates buckle.

This modification is estimated to take roughly two months of downtime and cost about US$500,000 per crane for construction. This modification is most suitable when portal clearance is required and strengthening with portal frame bracing is not practical, or when the wharf capacity is low and limiting the lateral loading is important.

Since the stiffening for ductility approach relies on the crane's ability to deform plastically, there will be permanent deformation after a major earthquake and the crane frame may need realignment. Bent plates may need to be restored by heat straightening or sections may need to be replaced. Repairs and downtime will take longer than for the strengthening approach. In addition to improving ductility, the strengthened portal frame will reduce the damage that will occur without the stiffening.

Adding a damper or isolation system

The cost and construction time for adding an isolation or energy absorbing system will vary considerably depending on the system used. One of the less expensive retrofit methods is to install friction dampers at the lower diagonal pipe brace connections as shown in Figure 4. The dampers slide and dissipate energy when the seismic force in the joints exceeds the friction. In addition to energy dissipation, friction dampers allow the crane's upper structure to flex laterally, reducing the forces in the lower portal frame, an area most prone to seismic damage. The modification simply involves cutting the lower end of the diagonal braces and inserting the friction damper connection, but may require stiffening of the upper legs.

A more effective but more costly method of improving the seismic response of cranes is adding an isolation system such as the one shown in Figure 5. For this system, the post-tensioned steel strands, which act as restoring springs, hold the joint closed for operation and allow it to open for seismic events when the pre-tension force is overcome. The cost of adding isolation hinges will be much less if the seismic retrofit is combined with other modifications such as a crane raise. Post-tensioned strands can also be added externally.

With a damper or isolation system, the cranes are likely to be

immediately operable after an earthquake. Neither system will alter the portal clearance or create obstruction in the lower frame.

Summary and recommendation

Stakeholders should consider the seismic risk for their existing cranes. A number of retrofit approaches are available to achieve acceptable seismic performance at relatively little cost. Retrofit will require some investment now but the damage and repair costs will be less in the event of a major earthquake, particularly if a crane has significant risk of collapse or is a critical link in the shipping system. The questions that stakeholders should consider when deciding whether to upgrade their cranes are how much does protection cost and what is it worth.

ABOUT THE AUTHORS

Michael Jordan is a Liftech structural engineer and CEO with over 50 years of experience. He is an internationally recognised expert in the container crane industry. He has been involved in the container industry evolution since participating in the structural design of the first container crane for Matson in 1958. Since then, he has designed the structures of hundreds of duty cycle cranes, prepared numerous specifications for the design of duty cycle cranes, and investigated fatigue damage problems and major failures caused by fatigue crack growth and brittle fracture.

Yoshi Oritatsu is a Liftech structural designer and registered professional engineer with five years of experience in the design, analysis, and modification of container cranes, large derrick cranes, bulk loaders, and wharf structures. His work includes the analysis of crane and wharf seismic response, including the effect of isolation and energy dissipation systems.

Erik Soderberg is a Liftech structural engineer and vice president with 18 years of experience in the design, review, and modification of a variety of structures including container cranes, wharves, buildings, heavy lift equipment, and various rigging structures. He has consulted on hundreds of cranes, participated in the design of numerous wharf structures, and has designed many crane transfer systems ranging from curved rails to shuttle systems. He has engineered repairs for dozens of container crane structures and for several bulk loaders. His field skills include an understanding of heat straightening techniques and the ability to develop repair procedures on site.

ABOUT THE COMPANY

Liftech Consultants Inc. is a consulting engineering firm founded in 1964, with special expertise in the design of dockside container handling cranes and other complex structures. Liftech's experience includes structural design for wharves and wharf structures, heavy lift structures, buildings, container yard structures, and container handling equipment. National and international clients include owners, engineers, operators, manufacturers, and riggers.

ENQUIRIES

Liftech Consultants Inc.
344 – 20th Street, #360
Oakland, CA 94612-3593, USA
Tel: +1 (510) 832 5606
Fax: +1 (510) 832 2436
Email: liftech@liftech.net
Web: www.liftech.net

Crane alterations for better efficiency and reduced emissions

Curtis J. Foltz, executive director, Georgia Ports Authority

One of the Georgia Port Authority's (GPA) top priorities is responsible stewardship of the environment. This has been demonstrated by the conversion of ship-to-shore container cranes from diesel to electric power, as well as gradually changing other container handling equipment to cleaner burning ultra-low-sulphur diesel fuel.

Moving from diesel to electricity

As a next step in developing more sustainable operations, the Port of Savannah has begun the transition from diesel to electrically powered rubber-tyre gantry (RTG) system. This makes the GPA the first in North America to introduce this cleaner and more efficient method of operation.

Just over 18 months ago, the GPA and our partners started an effort to solve a problem for our port, and in turn most major ports in America. How can we transfer our yard crane fleet to a cleaner form of energy without reducing mobility and efficiency on the terminal?

The new electrical rubber tyre gantry (ERTG) system was developed with the help of partners Konecranes, Conductix-Wampfler and Georgia Power, which provided the cranes, the new power system and the electrical infrastructure, respectively.

Early on, we knew that if we simply converted the diesel burning rubber tyred gantry cranes to electric, we would certainly have reduced emissions, but in the process we would also have reduced mobility and therefore efficiency of the cranes.

Developing a hybrid solution

That's when our team went back to the drawing board to develop a new hybrid crane that provides the emission benefits of an electric-powered crane with the flexibility to move across terminal. Custom built to a GPA design, the ERTGs are powered through 480 volt conductor rails installed on the container yard. While relying on electrical power to handle containers, our ERTGs use diesel generators to move from stack to stack and row to row. Using a retractable arm, the ERTGs will switch via an auto-engage system between diesel and the electrical grid. The ERTGs will also capture power when lowering boxes - energy which is currently lost under diesel power. This innovative system regenerates power back to the electrical grid, powering itself for 18 minutes each hour.

All functions of the ERTG – including linking to the conductor rails – are performed automatically or by the crane operator without other assistance. The conversion of the cranes to electrical power will result in an overall energy savings, reducing fuel consumption by 95 per cent, with a corresponding reduction in emissions.

Additional benefits to our new ERTGs include increased reliability, better performance and less downtime. Crane reliability is increased because the motors, drive systems, and all critical electrical components are perpetually energised, thereby reducing potential moisture damage. Maintenance and repair of diesel generators constitutes a significant portion of equipment downtime. Additionally, the conversion will reduce the overall staff hours required to provide maintenance on the cranes. In the end, fewer hours of diesel-powered operation will mean reduced maintenance costs and extended diesel life.

Further developments planned

Long term plans call for retrofitting the Garden City Terminal's fleet of diesel-powered RTG cranes with retractable arms to link to the conductor rail system, bringing the total number of ERTGs to 169 by 2022. Repowering the RTGs will be a multi-year initiative, requiring new cranes to be ordered with electric power capabilities, and some older cranes to be retrofitted. When complete, the ERTG fleet will allow the GPA to avoid the use of 5.97 million gallons of diesel each year. This will result in a net saving of nearly US$10 million each year, even after the purchase of electricity is factored in.

Of note for the broader logistics industry is that the RTG-mounted electrical equipment and retractable arm are compact and lightweight – important factors for subsequent ports considering

Photo by Stephen Morton

At 1,200 acres, the Garden City Terminal at the Port of Savannah is the largest single-terminal operation in the U.S. With 9,693 feet (2,955 m) of contiguous berth space, the port offers greater shipping schedule flexibility

Photo by Stephen Morton

Georgia Ports Authority Executive Director Curtis J. Foltz speaks at the unveiling of the first electric RTGs in North America

Photo by Emily Goldman

The Georgia Ports Authority's electric RTGs are powered through 480-volt conductor rails installed on the container yard. The ERTGs capture power when lowering boxes -- energy which is currently lost under diesel power

a transition to electric power. This means it can be used for any ERTG, even those with little room for additional components.

The ERTG project is the latest in a series of GPA initiatives increasing the productivity and capacity of the port in environmentally responsible ways. Through efforts such as electrifying ship-to-shore cranes and refrigerated container racks, the Port of Savannah avoids the use of more than 5.4 million gallons of diesel annually.

ABOUT THE AUTHOR

Curtis Foltz is the executive director of the Georgia Ports Authority (GPA), a 1,000- person strong state port authority that owns and operates strategic gateways serving the U.S. Southeast. Following five years as Chief Operating Officer for the Authority, Mr. Foltz took the helm of the GPA on January 1, 2010. As Executive Director, Curtis Foltz oversees all port activity involving the deepwater ports of Savannah and Brunswick, as well as inland terminal operations in Bainbridge and Columbus. Directing one of Georgia's largest economic engines, he administers a $280 million annual budget.

ABOUT THE ORGANISATION

The Georgia Ports Authority's Port of Savannah specializes in the handling of container, refrigerated, breakbulk and RoRo cargoes. The Port of Brunswick specializes in breakbulk, agri-bulk and RoRo cargoes. Facilitating global trade through strategic U.S. East Coast gateways, the GPA is a leader in the operation of modern terminals and in meeting the demands of international business. Georgia's deepwater ports in Savannah and Brunswick combine industry innovations with proven flexibility to create new opportunities along the entire global logistics pipeline, delivering what the market demands.

ENQUIRIES

Robert Morris
GPA senior director of corporate communications
Tel: +1 912 964 3855
Email: rmorris@gaports.com
Web: www.gaports.com

Gas analysis improves container safety

Antti Heikkilä, senior manager at Gasmet Europe Oy, Helsinki, Finland

Introduction

Entry to freight containers represents a significant hazard to staff responsible for inspection, stuffing or destuffing because of the large number of airborne chemicals that can be present. Research in Germany and the Netherlands found hazardous levels of gases and vapours in around 20 percent of all containers and this level of contamination is now accepted as commonplace.

It is therefore necessary to examine containers before entry and this work is usually conducted with a wide variety of gas detection techniques in order to be able to assess, individually, all of the substances of greatest concern. However, a Dutch firm of health and safety consultants, Reaktie, has employed Fourier Transform Infra Red (FTIR) gas analysis to dramatically improve the speed and effectiveness with which containers are assessed, because this technology enables the simultaneous measurement of the 50 gases of most concern.

Chemical hazards

There are two potential sources of hazardous chemicals inside cargo containers; fumigants and chemicals that arise from the goods or packing materials.

Fumigants are applied to goods to control pests and micro-organisms. Cargoes most likely to have been fumigated include foodstuffs, leather goods, handicrafts, textiles, timber or cane furniture, luxury vehicles and cargo in timber cases or on timber pallets from Asia.

According to the IMO's international regulations, 'Recommendations on the safe use of pesticides in ships', fumigated containers and ship cargoes must be labeled giving specifications about dates of fumigation and the fumigation gas used. Furthermore, appropriate certificates are necessary and these records have to be forwarded to the port health authorities. However, absence of marking cannot be taken to mean fumigants are not present. Containers marked as having been ventilated after fumigation may also contain fumigant that was absorbed by the cargo and released during transit. There is also concern that fumigants may be retained in the goods and subsequently present a hazard to logistics providers, retail staff and consumers.

Common fumigants include Chloropicrine, Methyl bromide, Ethylene dibromide, Sulfuryl fluoride and Phospine. However, with over 20 years of experience testing gases in containers, Peter Broersma from Reaktie says, "While the fumigants are highly toxic, the number of containers exceeding Occupational Exposure Limits (OEL) due to other chemicals is much greater and the number of 'failed' containers is likely to rise as more containers are tested, detection methods improve and new gases are identified."

Containers often travel for extended periods and experience a wide range of temperatures. It is therefore not surprising that unsafe levels of gases should accumulate in the confined space of a container. Peter identifies the typical sources of gases over their OELs as follows: solvents from glues used to produce clothing, accessories and shoes; 1,2-dichloroethane from plastic products; PVC; blister packaging; formaldehyde found in cheap furniture but also in used pallets and lashing materials; solvents and formaldehyde from poly-resin products; carbon monoxide from charcoal and natural products; carbon dioxide from natural products and ethylene oxide from medical equipment sterilised with ethylene oxide. Also solvents including Benzene, Toluene, Ethylbenzene and Xylene (BTEX) in Christmas and decoration products; flammable gases from disposable lighters; ammonia in household equipment with Bakelite parts; Volatile Organic Compounds (VOCs) from fire blocks; pentanes and hexanes from consumer electronics and phosphine/arsine from natural minerals such as ferrosilicon.

Inspection procedures

Major ports have strict regulations in place to protect against potential hazards in cargo containers. In general terms, every incoming stream of products has to be checked for dangerous gases and if one or more gases are detected during the preliminary investigation, all of the containers from this specific producer must be checked. If no gases are detected, it may be possible to only conduct random tests a few times per year. If it is necessary for customs staff to enter a container, all containers must first be tested and if necessary de-gassed.

Gas detection

Since there are a large number of gases that might be present inside a container, the traditional approach to monitoring has been either to employ a wide range of instruments or to use chemical stain tubes for the most common gases, or a combination of both.

Chemical stain tubes provide a colorimetric assessment of an individual gas, typically with an accuracy of +/- 15 percent. Different tubes are available for many gases and results can be obtained between five seconds and 15 minutes depending on the test. Once a result has been obtained, the tube itself is hazardous waste and must be disposed of. Historically stain tubes have been popular because the cost per test is low. However, the number of tubes that have to be employed in order to demonstrate that a container is safe can be prohibitively expensive and time-consuming to employ.

Instrumental gas analyzers such as electrochemical sensors, that measure either a single gas or a small number of gases impart a similar level of risk to stain tubes because of the possibility of missing or failing to measure a harmful gas. Deploying multiple instruments also presents practical problems because each will require maintenance and recalibration in addition to a power source or recharging. Nevertheless, Reaktie for example, would normally conduct a preliminary assessment with a photoionization detector (PID) for total VOCs; a Lower Explosive Limit (LEL) combustible gas sensor and handheld electrochemical sensors might be employed for toxic gases such as carbon monoxide, phosphine, ammonia and ethylene oxide. A FTIR analyzer would then be employed to measure 50 target gases simultaneously in a test that would take approximately three minutes. This ability to measure compounds individually is important because, for example, whilst a PID gas detector measures total VOCs, it does not provide an individual value for, say, benzene, which is a known carcinogen.

One of the potential problems with electrochemical sensors is


Sampling air from a container


Testing in progress


Using a portable FTIR gas analyser (Gasmet Technologies model DX4040)

their inability to cope with high concentrations in a sample gas. This can result in poisoning of the cell, which would normally lead to instrument failure. In contrast, similar high concentrations do not harm FTIR, and the instrument can recommence analysis after a few minutes of backflushing.

Peter Broersma has been one of the first to utilize FTIR in the assessment of containers since it became possible to acquire the technology in a portable battery powered unit. He says, "The problems with hazardous gases in cargo containers is now widely publicized and the requirement for testing is growing as employers fulfil their responsibility to protect the health and welfare of staff. However, the traditional testing methods are laborious, time-consuming and risk failing to find a potentially harmful gas.

"FTIR has long been established as an accurate technology for the simultaneous measurement of gaseous emissions from industrial processes, so when the Finnish company Gasmet developed a portable version we were very eager to investigate its feasibility in container testing.

"Following our initial tests, we worked with Gasmet to develop a configuration for the portable FTIR (a Gasmet DX4040) that would measure the 50 compounds of greatest concern. As a result, we are now able to test for all of these gases in around three minutes, which dramatically lowers the time taken for container inspection and greatly increases the number of containers that can be examined every day.

"A further major advantage of this technology is the minimal amount of calibration and maintenance that is necessary. A new instrument can be delivered pre-configured and factory calibrated and from then on the only calibration required is a quick zero check with nitrogen once or twice per day. As a result, it is not necessary to transport a large number of expensive, bulky calibration bottles.

"We now use a portable FTIR for all of our container examination work and we have also supplied a number of these units to freight companies that wish to conduct their own testing. This technology is now in use at Rotterdam, Amsterdam, Vlissingen, Antwerp and Hamburg, and a company providing ship fumigation and degassing is using portable FTIR all over the world."

FTIR

A FTIR spectrometer obtains infrared spectra by first collecting an 'interferogram' of a sample signal with an interferometer, which measures all infrared frequencies simultaneously to produce a spectrum.

Over a number of years, Gasmet has established a library of reference spectra that now extends to simultaneous quantification of 50 gases or identification of unknowns from a collection of 5000+ gases. This means that it is possible to reanalyze produced spectra with the instrument's PC based software (Calcmet) and thereby to identify unknown gases – a major advantage of FTIR.

While FTIR is able to analyze an enormous number of gases, the technique is not suitable for inert gases, homonuclear diatomic gases (eg. N2, Cl2, H2, F2, etc.) or H2S (detection limit too high).

High levels of accuracy and low levels of maintenance are achieved as a result of continuous calibration with a He-Ne laser, which provides a stable wavenumber scale. In addition, high spectral signal to noise ratio and high wavenumber precision are characteristic of the FTIR method. This yields high analytical sensitivity, accuracy and precision.

Summary

Millions of containers arrive in international ports every year and it is clear that a large proportion of them represent a significant hazard. Employers have a duty of care to protect their staff and court cases have found in favor of workers that have suffered

Data analysis

ill-health from container gases. It is inevitable therefore that the amount of testing required will continue to increase so there will be a greater emphasis on speed, risk reduction and cost.

Portable FTIR gas analyzers substantially reduce the amount of equipment required to test a container, but more importantly, the technology enables the simultaneous analysis of a large number of target compounds, which improves the effectiveness of the assessment and reduces risk to staff. The technique is also much faster and avoids the use of disposable equipment.

ABOUT THE AUTHOR

Antti Heikkilä is a senior manager at Gasmet Europe Oy, specialising in developing new applications for the Gasmet FTIR gas analyzers. He holds a MSc degree in Physical Chemistry and has 14 years' expertise in FTIR spectrometry and quantitative gas analysis, working for University of Helsinki and Gasmet Technologies group.

ABOUT THE COMPANY

Gasmet Technologies is a leading manufacturer of gas monitoring instruments and systems for industrial and environmental applications including continuous emissions monitoring (power plants, waste incinerators, cement kilns etc.) Stack testing/comparison measurements, process control, industrial hygiene/indoor air quality, engine exhaust gas, semiconductor manufacturing, emergency/first response measurement (HAZMAT), greenhouse gas monitoring, carbon capture, fire testing emissions monitoring and research. Gasmet FTIR gas analyzers can perform simultaneous measurement of both organic and inorganic compounds in even the most demanding applications including hot, wet and corrosive gas streams. Concentrations of up to 50 different compounds can be measured within seconds.

ENQUIRIES

Head office
Gasmet Technologies Oy, Pulttitie 8 A, FI-00880 Helsinki, Finland
Tel: +358 9 7590 0400
Email: contact@gasmet.fi
Web: www.gasmet.fi

North America Office:
Gasmet Technologies Inc.
Toll free line: 1-866-685-0050
Sales email: sales@gasmet.com

Asia Office:
Gasmet Technologies (Asia) Ltd.
Tel: +852 3568 7586
Email: sales@gasmet.com.hk

Q&A with Hannu Oja, director of Port Technology, Konecranes

Port Technology International discusses green technologies, automation, RTGs and other key issues affecting the container handling industry with Konecranes' port technology director Hannu Oja.

How are the challenges faced by container terminal operators today different?

There is a greater requirement to minimise vessel turnaround time at berth. This along with the constantly increasing number of container moves is forcing container terminals to maintain a constantly high level of productivity with better predictability. Furthermore, the berth time is squeezed still more by the pressure of fuel economics -- the need to reduce sailing speed while keeping to vessel route schedules. The performance of the entire logistical chain in the terminal is under scrutiny, not just the quay cranes. Meanwhile, environmental and safety concerns are becoming more important: output must grow but fewer resources can be used and safety must improve.

Systematic performance improvement is a must for every terminal operator to remain competitive. Does Konecranes offer advice to container terminals on areas of improvement?

A container terminal is an exceedingly complex operation and we at Konecranes would not presume to understand the core business of our customers better than they do. As a manufacturer of container handling equipment, however, our customers expect us to provide expert advice on how to get the best out of Konecranes equipment in the areas of availability and productivity above all. As part of this we provide monitoring, diagnostic and maintenance systems both on the equipment itself or remotely that can help to improve maintenance activities. I would make the claim that, thanks to our design philosophy which covers dedicated crane technology and our own core components, we provide a unique single source of knowledge to answer equipment-related questions in container handling.

Container terminals are searching for solutions to increase throughput capacity without expanding their physical footprint. What do Konecranes recommend in this instance?

Stacking operations are of course a very important parameter in throughput capacity. When the usable area for stacking operations in the yard is limited, one must try to increase stacking density. But there are other parameters that have a bearing: type of operation (export/import vs transhipment), share of empty containers and dwell time, among others, are important parameters when designing the yard layout and choosing equipment. Today we see yards with similar throughputs, performance and productivity, that are equipped very differently. When the space available for stacking operations is limited, RTG-based or RMG-based solutions come to the fore: both provide high-volume stacking and electrification as a power option.

When buying an RTG or RMG, it is easy to get caught up in the repeated mantra of low fuel or energy consumption per hour. However, there are those that feel that the real comparisons should be based on the cost in terms of fuel or energy per TEU moved. What is your stance on this? Why is this so?

This discussion is an example of mixed marketing messages. Unfortunately, the industry has not yet been able to provide a standard system of measurement for container crane performance, similar to that provided by the automotive industry or even for household appliances. PEMA has been driving an initiative, which we at Konecranes fully support, to provide a standardized system of measuring energy consumption per TEU, with weight and performance data, that would enable realistic comparison. I am sure the market will welcome this.

Can automation be introduced to one part of a container terminal's operations only, or must it be introduced across all areas of operation for it to work or be of benefit?

There is an old paradigm of industrial automation which says: "plan to automate everything, but realize only 20% of the plan -- you will get 80% of the benefit." There is a lot of truth in this, especially

CONTAINER HANDLING

Khalifa Port, Abu Dhabi, United Arab Emirates

when we look at processes that are variable. A container terminal comprises so many processes with exceptions and variable human interactions that I prefer to build in planned buffers between critical areas, to make an allowance for flexibility. This is mainly a risk management issue in project delivery: we smooth out start-up by planning for buffer in sequencing, which gives us the flexibility needed to balance the areas and fine-tune things. An automated container terminal is a huge, complex interaction of processes.

It has recently been debated by some that the process of automation will not only extract better utilisation of equipment but more significantly extend the lifespan of these expensive assets. Do you see this being a valid statement?

Yes, definitely. Every fully-automated or semi-automated function that has been introduced has produced this effect. When the human factor is removed, automation carries out equipment movements in precisely the same ways, and can be tuned to be gentle to the equipment. Automation can also be implemented as driver-assistance, to cut down on unintentional movements that cause wear and tear and unnecessary energy consumption.

Equipment that helps to improve stacking density and productivity is key but performance criteria have evolved to include green/electric and environmentally friendly solutions. How well prepared are Konecranes in this regard and particularly for the future?

Environmental consciousness is becoming more important in our industry. The cost of energy is still often the primary driver. Knowing that natural resources are finite, we can see a day, within the lifetime of the equipment being bought today, when fuel prices could climb to a level now beyond our comprehension. Energy should be the main point around which the environmental discussion turns. But we should remind ourselves that the equipment should itself consume as little energy as possible per work action. Then, the energy used should be regenerative for re-use. Finally, the method of energy generation at source can be discussed. Sometimes we get mixed up between local emissions and the generation of electrical energy in power plants, but the basic difference is related to the efficiency of the energy conversion process. Konecranes has a full complement of eco-efficient technologies in its product portfolio: diesel fuel saver, regenerative braking and energy storage (hybrid) systems.

Is it fair to suggest that on occasion, some terminals will adopt a certain degree of unproven technology in order to reach the necessary productivity? What's your opinion?

As a technology developer, I welcome any terminal that will be a pioneer in adopting new technology! This has happened in the past, and it needs to happen more for this industry to go to the next level -- never mind take a "quantum leap". Realistically, the risks are high due to the scale of the equipment investment. And the container handling business is driven by proven references, an entirely reasonable approach and sound business. But there is always somebody keen to pilot a promising new idea that can open up competitive advantages. I think we need new models to handle and share economic risks, adventurous new technology projects become feasible.

ABOUT THE COMPANY

Konecranes is a world-leading group of Lifting Businesses™, serving a broad range of customers, including manufacturing and process industries, shipyards, ports and terminals. Konecranes provides productivity - enhancing lifting solutions as well as services for lifting equipment and machine tools of all makes. In 2011, Group sales totaled EUR 1,896 million. The Group has 11,700 employees at 609 locations in 47 countries. Konecranes is listed on the NASDAQ OMX Helsinki.

ENQUIRIES

Hannu Oja, PhD (Tech.), Director, Port Technology
KONECRANES
P.O.Box 662 (Koneenkatu 8), FIN-05801 HYVINKÄÄ, FINLAND
Tel: +358-20-4272640
Fax: +358-20-4272599
Email: hannu.oja@konecranes.com
Web: www.konecranes.com

Dry Bulk and Specialist Cargo Handling

"Unlike current cargo ships, Seasnake modules can simultaneously accommodate food-grade oil, industrial chemicals and fresh vegetables in one sail without the danger of cargo cross-contamination."

'Seasnake: a versatile concept' page 52.

Obtaining life-long results in your stock-pile cover

John Delaney, vice president of sales, CST Industries

When making a decision regarding a cover for large bulk material stockpiles, it is important to take a long, hard and honest look at several factors. Environmental considerations, operations, erection, project schedule, maintenance, suitability of the cover for the specific application and lifecycle cost analysis are all part of the process.

If we assume that it is not a question of whether to cover our bulk materials, but with what to cover, then we must consider several issues. In industry it is generally accepted that equipment designed or engineered specifically for an application and manufactured in a quality controlled environment will function better and more likely perform as designed for many years without problems. The same approach should be taken with stockpile covers, even though they may be considered a structure.

What are the important issues to ponder before selecting a cover for a particular application? A series of questions should be posed which impact not only life-cycle cost, but operational efficiency of the overall storage system. Although the cover should be evaluated like a piece of equipment, the cover has the additional aspects of geographical location and local building codes to evaluate.

Basic considerations

There are basic practical considerations to be made when choosing the right cover solution. The location of the project is of primary importance. This has related parameters such as wind, snow, seismic considerations to be accounted for in the design. The material that is to be stored affects the requirements of the structure, for example, coal should be stored in a well-ventilated structure, which then has an impact on the design. The properties of the material must be considered as the bulk density and angle of repose are important in determining the overall storage size when used in conjunction with storage capacity and a particular handling process.

The storage capacity will be determined by the maximum that the owner needs to store at a given facility and this should be relayed to the cover supplier. Based on their experience, the cover supplier should be able to recommend a material handling system for the given application and provide recommendation of size, even before other equipment suppliers are involved.

Storage system configuration

Once the storage capacity is determined, decisions regarding how the material should be stored must be considered. One of the tremendous benefits of circular storage is the ability to store large amounts in very small areas by utilising perimeter walls as an integral component of the storage system; the higher the wall, the greater the storage capacity for a given area. Of course, there are practical limits, but it is not unusual to store coal or iron in 120 metre diameter stockpiles, with material stacked up to 18-19 metres against the wall. This would then limit the choices of suitable stacker reclaimer systems. For example, nearly 200,000 metric tons of coal storage can be achieved with a 120 metre diameter footprint, depending on the design bulk density and angle of repose.

An Example of a stockpile Cover

Material handling system

Once the storage system configuration is selected, the material handling system may be a foregone conclusion and the general cover design parameters defined. The material handling system manages the feed and discharge of the material in storage. The selection of the material handling system may be a preference, or it may be driven by the process, or by the required storage capacity. It is also important to recognise the difference between blending and storage, as the reclaim system will typically be different. For the purpose of this discussion we will only consider storage applications. It is highly recommended to seek the opinion of a material handling system supplier or the original equipment manufacturer (OEM), specialising in the material being stored, as to which type of system is suitable and practical for a given application.

How the material will be brought into storage and how it is reclaimed are important questions. The answers will have an impact on shape and size of the cover, not only because of size due to storage volume, but due to the necessary internal clearance envelope for operations within the covered area.

Material delivery is important and we will consider that in all cases the material is brought to the covered storage via conveyor of some type. The material distribution can be as basic as a simple drop from the conveyor onto a simple conical pile, or into a stacking tube to reduce dusting, or via stacking arm of a circular stacker reclaimer. The material reclaim will be manual with front end loader, drawdown hoppers or a circular reclaimer as part of the circular stacker reclaimer.

'Manual' system implies front end loader reclaim. 'Automatic' implies some type of mechanical reclaim system, whether drawdown hoppers or scraper reclaimers (linear or circular). For automatic reclaim, both linear and circular have their own strengths in particular applications. For large quantity storage applications, the circular systems are by far the most efficient. We will only consider circular systems, but the same line of thinking applies to linear stockpiles and their covers.

Access and accessory requirements

There are a host of items to consider which impact the design, and may or may not be critical to operations. In most, cases the

TEREX® FUCHS PORT SOLUTIONS

125 Years blue evolution

The future of port handling

Features

- Product range from 19 t to 95 t
- Reach up to 23 m
- Handling capacity up to 1,000 t/h
- Diesel or electrical engine
- On wheels, tracks or rails

Benefits

- Fast working speed
- Independent of weather conditions
- Flexible operation place
- Low fuel consumption

bauma München Germany 2013
15.-21.04.2013

Open-air site F7
Stand 710/711

thomas.berners@terex.com
www.terex-fuchs.com

TEREX® | FUCHS

WORKS FOR YOU.™

material will enter via conveyor or perhaps a stacking tube, which requires an opening in the cover. The location and size of the opening are important. How the material is reclaimed or if there are any processes within the storage area will determine other requirements. For example, if material handling is automated with stacker reclaimer, other access requirements must be outlined eg. man doors and mobile equipment openings for equipment maintenance, etc. However, if manual handling with front end loaders is selected, the perimeter space, clearance between toe of the pile and perimeter wall and/or cover, and height requirement for the equipment must be considered. Depending on the stored material, ventilation requirements must be reviewed. The cover supplier should be able to make recommendations based on past projects. Interior illumination is very important if manual material handling is utilised. During daylight hours, skylights in the cover will provide sufficient illumination with correct placement and total size. For night time lighting there are several options, but in all cases lights should be placed to ensure that maintenance is not compromised by lack or difficulty of access. Once the general size and operational requirements have been defined, the scope of supply for the cover is fairly well defined.

Type of cover material

The next key question for consideration is which cover types are viable. The most common materials of construction include steel, concrete and aluminium.

Steel covers

Steel domes can be split into two categories, first being those using conventional steel beams and the second one using small diameter pipe in space frame structure (pipe and hub). The erection of steel domes is labour intensive as the conventional steel beam structures require heavy equipment to handle the parts and pieces. The pipe and hub parts are smaller and lighter, but generate difficult working conditions as crews climb the structure as it is erected. Both these systems are built from the ground up, resulting in crews having to work progressively at greater heights until the apex, which can easily be 40 metres above ground, is reached. Large diameter domes can take up to six months, or in some cases, longer to erect.

The cladding or skin is either corrugated aluminium or painted steel. However, regardless of the cladding, it is secured using screws through the panels into the structure. Over time there are potential maintenance issues related to leaks and panel replacement as differential movement takes place between the structure and cladding. Generally, painted/primed coating or galvanising is used to protect the steel from corrosion in the conventional and pipe and hub systems, respectively.

Concrete covers

Concrete domes are based on thin shell theory that relies on exact rebar location within the concrete shell which, under certain conditions, may be difficult to achieve. A membrane is inflated to create the exact form the concrete dome will take in the end. This membrane must remain at the exact shape in order for the second step to proceed according to plan. The process relies on maintaining constant pressure and ensuring winds do not alter the shape of the form, at the critical point in the process. In the second step, urethane is sprayed on the underside of the membrane, which creates the media upon which the rebar is then attached. After rebar is attached, shotcrete is sprayed onto the urethane, encasing the rebar and creating a composite structure made up of membrane, urethane, rebar and concrete. A high level of expertise is required to ensure a quality installation.

Concrete domes rely on the membrane to act as the moisture barrier. If it is damaged, water will find its way to the rebar and corrosion may be initiated. Concrete domes have limitations on size, and once built, it is not possible to modify or add appurtenances, limiting flexibility in the future.

Aluminium covers

The all-aluminium dome structure is designed and engineered to provide simple, safe installation, and because of the material of construction, it will last the life of the plant little-to-no maintenance. Unlike steel, aluminium does not require any coating or corrosion protection. Unlike concrete, it is not a composite material subject to the installer's skill. Its mechanical properties are unaltered from the as-received alloy. It is simply mechanically locked together without any welding.

Clear-span aluminium domes are the most widely used circular covers. They were first used more than 40 years ago in industrial application, and eventually found themselves as the structure of choice for bulk material storage because of their clear-span advantages at large diameters. With aluminium's natural corrosion resistance, these structures eliminate nearly all maintenance during the life of the cover.

Because of its light weight, aluminium offers reduced labour requirements, up to 33 per cent lower than steel domes, and precision manufacturing eliminates most field errors. With aluminium structures, all parts are mechanically locked in place with vibration-resistant connectors and no welding of aluminium structural members or panels is required. Using aluminium typically reduces construction time, as these domes may be erected in half the time of steel domes.

In addition, aluminium is naturally corrosion resistant and requires little-to-no maintenance for the life of the cover. Its low emissivity and high reflectivity means these covers do not radiate heat or cold, helping to keep the interior of the storage area cooler, and keeping the stored material cooler. Aluminium also is environmentally friendly material, being 100 per cent recyclable even after 50 years or more.

Conclusion

Whether aluminium, steel or concrete, the material of construction and all the other considerations mentioned here, will in turn impact on the design, erection process, longevity of the cover, and ultimately the true lifecycle cost.

ABOUT THE AUTHOR

John Delaney is VP of Sales for CST Covers and has been with CST since 1993. Mr. Delaney has 20 years of experience selling Temcor and Conservatek aluminum domes and is responsible for the global sales efforts of CST Covers. Mr. Delaney has extensive experience selling to the various markets around the world and is based out of CST Covers' headquarters in Conroe, Texas.

ABOUT THE COMPANY

CST Covers is the worldwide leader in the design, manufacture and construction of custom aluminum covers and structures for environmental, industrial and architectural applications. With more than 16,000 covers installed in more than 90 countries, CST offers high strength aluminum design solutions for domes, vaults, extruded flat covers, formed flat panel covers, truss supported covers, space frames and custom designed unique vertical and overhead applications.

ENQUIRIES

CST Covers
Division of CST Industries, Inc.
498 N. Loop 336 E, Conroe, Texas 77301 USA
Web: www.cstcovers.com

CONVEYING

CIMBRIA.COM

CIMBRIA MODUFLEX

DUST FREE LOADING SOLUTIONS

CLEAN ENVIRONMENT AND WORKING SAFETY IN ONE PRODUCT

CIMBRIA MODUFLEX

loading chutes for loading any dry bulk material into tanker trucks, open trucks, rail wagons, ships and for stock piling. The loading chutes can be supplied both with and without integrated filter and with full ATEX-approval.

SOLUTIONS.
TOGETHER.

CIMBRIA BULK EQUIPMENT A/S
Drejervej 10
7451 Sunds
DENMARK
Phone: +45 72 42 24 00
cbe@cimbria.com
www.cimbria.com

CONVEYING | DRYING | SEED PROCESSING | ELECTRONIC SORTING | STORAGE | TURNKEY

Seasnake: A versatile concept

Edward M. Anderson, vice president operations and technology, Seasnake Worldwide Marketing, LLC, Superior, Wisconsin, USA

In this day and age of bigger and bigger ships carrying more and more cargoes to centralised ports, are we ignoring the smaller port cities that have draft restricted harbours and limited dock space? Are we underutilising routes that proceed inland like the St Lawrence Seaway or inland river routes that may be found in India, Europe and Asia? Does this centralisation cause its own congestion and bottleneck issues?

What if there was a system developed to take into account servicing smaller ports and docks on a regular basis, a concept that could take into account the advantages of drop and swap, and take advantage of the efficiencies of shipping via water. What if there was a concept that could keep small shipyards in business, and create jobs in small port cities that are suffering from high unemployment. What if there was a system that allowed shippers to unload their cargoes on their time instead of having to unload a ship in the middle of the night because it has a schedule to keep. What if smaller companies were able to locate in less congested areas and not have to build multi-million dollar docks to be able to ship their cargoes via water? What if government entities did not have to consider billion dollar bridge replacement or lock lengthening projects just to make room for the Super Max and larger ships to proceed under or pass through?

The Seasnake solution

A concept is under development that can address these issues and answer these questions.

The Seasnake marine train is a patented vehicle for transporting liquid, bulk and container cargo. It is the only all-purpose utility vehicle designed for safe, rapid, cost-effective movement of cargo through any marine transport system. Seasnake will modernise the shipping industry without the need for raising bridges, changing port designs or dredging channels, and can utilise existing loading and off-loading systems. Moreover, the Great Lakes model incorporates design technology which allows it to operate ballast-free, eliminating the anticipated need for expensive invasive species prevention measures.

The design incorporates a multi-module cargo handling system, allowing for rapid adaptation to all types of cargo in all types of markets. Unlike current cargo ships, Seasnake modules can simultaneously accommodate food-grade oil, industrial chemicals and fresh vegetables in one sail without the danger of cargo cross-contamination. This flexibility allows cargo shipping companies to maximise load capacity and gain industry efficiencies that were previously unattainable.

Figure 1: Seasnake marine train

VIGAN

POWER IN ACTION

Port equipment - Ship Loaders / Unloaders

With **1,200** machines sold
in more than **80** countries
over **43** years,
VIGAN is your experienced partner
for loading and unloading
the most precious commoditiy on earth.

Grain deserves reliability

VIGAN Engineering S.A. Rue de l'Industrie, 16 ▸ 1400 Nivelles (Belgium)
Phone : +32 67 89 50 41 ▸ Fax : +32 67 89 50 60 ▸ www.vigan.com ▸ info@vigan.com

Visit our new website www.vigan.com

Commercial and military uses

While the Seasnake system is the obvious choice for the commercial shipping industry, the highest and best use of the technology is in military cargo hauling applications. The ability to 'drop and swap' modules and leave them moored at a port or a sea-base to load or discharge cargo at the discretion of the shipper, provides flexibility that allows the rest of the train to continue delivery of modules to other ports or maintenance facilities, maximising utility (and revenue for commercial applications).

Seasnake can transit all major canals and lock systems, operate in shallower ports and can match existing ships in speed and power. Unlike existing tug-barge systems, Seasnake can safely navigate open ocean storm conditions. The ability to isolate modules in the event of an accident, fire or attack gives the military an additional measure of control and containment that is simply not available in traditional shipping vehicles. It can be outfitted with alternative fuel systems, allowing the military to circumvent dangerous fuel stops.

Cargo modules can be designed to act as helicopter landing zones, electrical power generators, water purification systems, field hospitals, command and control segments or other support systems that would be significant assets in response to national security incidents. Modules can be towed to the scene of natural disasters such as hurricanes, earthquakes, or tsunamis, to aide in disaster relief. Special security modules could be inserted into marine trains to deter piracy on some trade routes.

Practical benefits

The cost in steel to build Seasnake is dramatically lower than traditional cargo ships and differing units or modules can be built simultaneously in multiple small shipyards thus cutting down on overall construction time, benefiting workforces and economies in multiple locations.

Because the cargo modules are unmanned, the crew sizes, thus labour costs will be less and because the segments are towed instead of pushed, the fuel costs will be less than an integrated tug barge system.

The concept is, in effect, a marine train that uses modular barge units or waterborne boxcars that can be configured to carry whatever cargo a shipper would require, be it a liquid, bulk or containers. Designed in three different drafts, a 45 foot draft model (SS45) for open ocean trade, a 35 foot draft model (SS35) for coastal trading and a 26.5 foot draft model (SS26.5) for trade on the Great Lakes, St. Lawrence Seaway system and other draft restricted waterways worldwide.

The train of barge modules is held together with a ball and socket type connection that links the train together at the centre of a circle which circumscribes the underwater cross section of the semi-circular hull designed cargo modules.

The system has a patented universal connection system, like the universal connectors that are found on railroads. The connection system can be adjusted vertically to account for different weights of different cargos that would be made up into a single train. A train could carry a module full of feathers and a module full of stone on the same train.

The system would allow for multiple builders in smaller shipyards to build the cargo modules (marine boxcars) because they are of varying sizes dependent on the needs of the owner, but they would all contain the same universal connection system. There could be multiple owners of the traction units (engines) and the powered cargo handling modules (cabooses). Several marine railroads could develop or affiliate with existing railroads in different market areas that would service the various customers along the waterways serviced by this marine railroad.

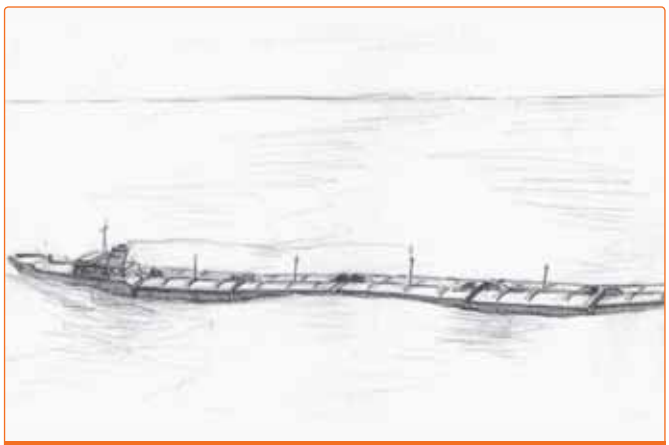

Figure 2: Original drawing by Carlos Kountz Wierick

Background

The Seasnake seagoing barge train concept was invented by Carlos Kountz Wierick, a Mechanical Engineer of Uraupan, Mexico and patented in the United States on 6 February 2001. US Patent Number 6,182,593 B1.

A ship's cost has been found to be proportional to the net steel used in building it. A dimensional analysis shows that the net steel to displacement ratio of the Seasnake runs about 11 per cent. For a conventional tanker this ratio varies from 15 per cent for a 50,000 tonne tanker to 12 per cent for a 300,000 tonne tanker. The above figures apply to single hull vessels and are given for comparison purposes. In the case of double hulls, the figure for the Seasnake, as well as for the tanker, will be higher. However, that great saving in steel will be partially offset by the cost of the connection mechanism.

Seasnake was initially designed by Mr Wierick to be a tanker designed to carry oil from offshore sites to draft restricted harbours in the Gulf of Mexico. He initially designed the system in 1974 when he was working for PERMARGO, a Mexican shrimp fishing company. It was during this time that oil exploration in Southeast Mexico was at its peak. As the new oil fields were being discovered, the question of shipping the oil became of great interest. The problem was that the draft of the harbours in the Gulf of Mexico was too low to accommodate the large tankers that were being built.

It was then that he conceived the idea of a modular ship that would retain the advantages of the large tankers and eliminate their disadvantages. He started to prepare a technical analysis, which convinced him of the feasibility of the concept. However, the magnitude of the project was overwhelming and it was shelved.

The project was revived in 1992, when Mr Wierick met the late John F. Marcley. Mr Marcley was impressed when this dormant project was revealed to him. He actively encouraged him to revive his project and to apply for a patent which was done. Mr Wierick prepared a formal feasibility study and submitted it for evaluation to C.R. Cushing & Co, an established naval architect and marine engineering firm in New York City. In 1999, they finished their report with a favourable outcome. Mr Wierick then made some refinements and adjustments to his design. In 2000, Wierick and Marcley founded Seasnake LLC with the stated purpose of developing the Seasnake. In January 2001 the advanced analysis department of the ABS undertook a computer analysis to determine the

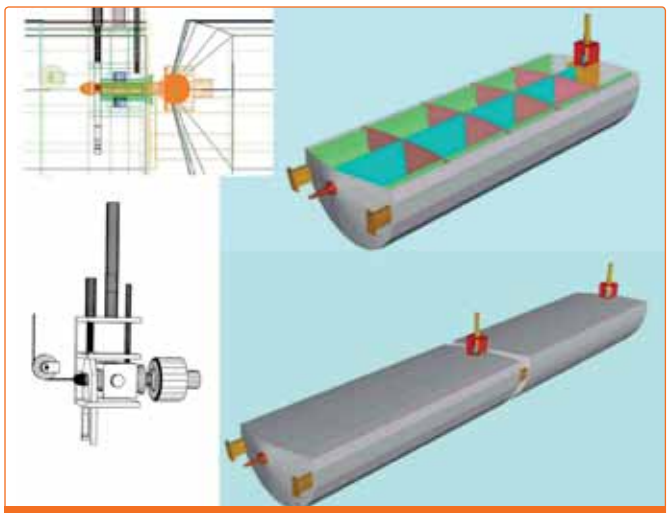

Figure 3: Seasnake connection system and tanker cargo modules showing bulkheads for oil tanker making the design more resilient to oil spillage if a collision should occur

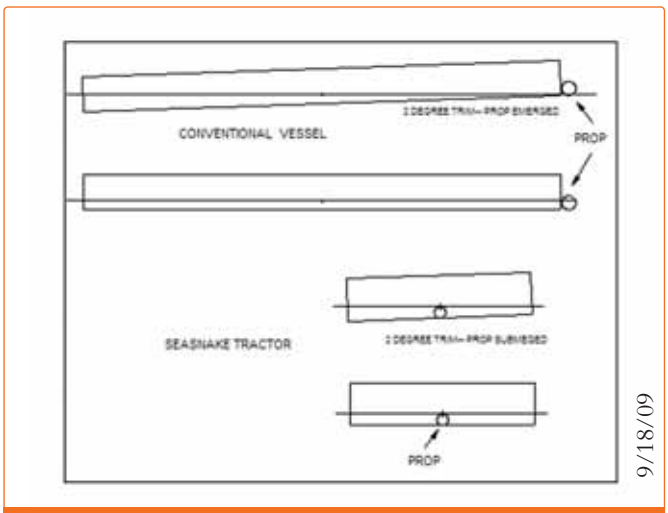

Figure 4: Diagram of ballast requirements preventing propeller emergence of conventional vessel compared to Seasnake, drawn by Carlos Kountz Wierick

impact of wave-induced forces on the hull and the connection system. In 2001 and 2002, tank tests on a 1:94.1 scale model were made at the University of Michigan in Ann Arbor. These tests determined the power requirements and the sea keeping features of the ship. In 2002, the naval architectural firm Rosenblatt & Sons was engaged to make an economic study of the system with the primary purpose of determining the cost of the ship and the operating costs.

Economic study

In the June 2003 issue of the Naval Architect, International Journal of the Royal Institution of Naval Architects, a three page article was published, titled 'Seasnake an Alternative Tanker Proposal'. In August of that same year Rosenblatt & Sons concluded its economic study. This study confirmed the significant cost saving in building the Seasnake. Shortly after the completion of the economic study, the project ran out of money and again languished until July 2008, when Michael Okash, a 20 year business owner with over 28 years of experience as a longshoreman, stevedore and stevedore superintendent became involved. Mr Okash formed Seasnake Worldwide Marketing LLC which has the exclusive marketing rights for the concept and design.

Seasnake Worldwide Marketing LLC, designed a website: www.seasnake.net which contains specific additional information regarding the Seasnake concept and design.

After Michael Okash became involved with Seasnake, he suggested that Carlos Kountz Wierick develop a design that could be utilised on the Great Lakes and St Lawrence Seaway System and this is when the SS26.5 was developed to join the SS35 and the SS45 designs.

Design details

One of the characteristics of the SS26.5 is that by the nature of its geometry it can operate free of temporary water ballast, making it a platform of interest when discussing the problem of invasive species being introduced in fragile water systems. On cargo vessels, water ballast is added to the ballast tanks when empty to: increase propeller immersion; improve steering; control trim and draft; and when partially loaded to equilibrate the weight distribution along the length of the hull in order to avoid excessive bending stresses in the hull. Due to the low length:height ratio of the Seasnake units, trim control is of little importance. The propellers in the tractor are placed centrally and sufficiently low to prevent undesirable propeller emergence (see Figure 3). By the same token steering and bending stresses in the hull due to uneven loading is not an issue. Therefore it is believed that the SS26.5 can operate without water ballast. Carlos Kountz Wierick believes that if the SS26.5 operating empty were to encounter a rough crossing, say of Lake Superior, it could take on water into the cargo modules until the storm passes and return the water to the same water body limiting the potential for invasive species pollution.

The Seasnake design is very versatile and can be configured to be a long train or to carry just one cargo module.

The SS45 has been calculated to carry 1183 standard twenty-foot equivalent unit (TEU) containers, 8 feet wide by 8.5 feet tall and 20 feet in length with a maximum gross weight per container of 52910 pounds. An alternate calculation of capacity in a ballasted SS45 module, in consideration of deadweight tonnage (DWT) is to increase stack weight to 140 metric tons (308,647.17 pounds) per 20 feet stack (under deck) and carry up to 5 or 6 container stacks on deck with a lower stack weight. In most cases the full DWT would not be consumed and hence stability can be accomplished by ballasting double- bottom tanks to lower the centre of gravity. The SS35 has been calculated to carry 515 standard TEU containers, and the SS26.5 - 230 standard TEU containers. Visibility is not an issue as the traction unit is in the front. Seasnake is ideally suited for drop and swap where a cargo module is left at a dock for unloading or loading and can be exchanged with an existing module that is either loaded or empty and then returned to the waiting Seasnake marine train, which can then continue on to its next destination.

Additional flexibility

The Seasnake has the ability to disconnect a module if it were to catch on fire or suffer other damage limiting the danger of sinking to only the damaged module instead of the entire ship. In the case of a collision where a tank is ruptured, the oil spill in a 200,000 tonne tanker would be 17,000 tonnes. If the ship is lost, the potential for the spill could be far greater. On the other hand in the case of a collision in a Seasnake module (SS45), the spill from a ruptured tank would only be 2,200 tonnes or eight times less.

A 1,500 foot Seasnake can be disconnected in the middle and half pulled through an 800 foot lock system like those on the St Lawrence Seaway system and the other half pushed through the

Figure 5: Seasnake traction module

Figure 6- Seasnake in different configurations, left for open ocean transit and right for coastal trading. The design is also capable of carrying containers in each of its configurations

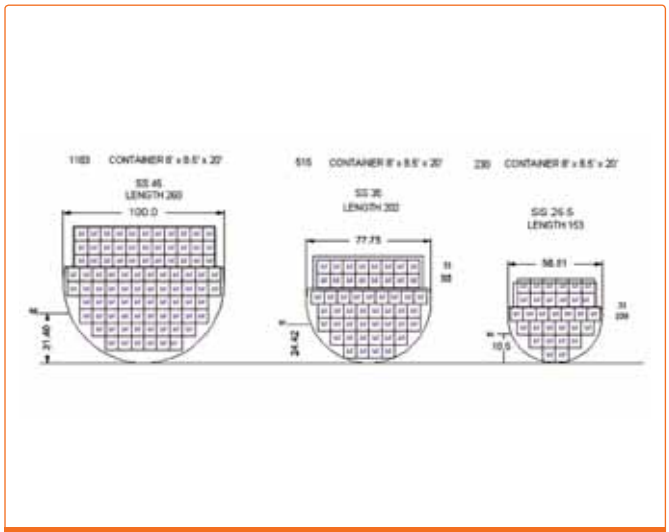

Figure 7- Seasnake container capacity in each draft configuration

Figure 8: Seasnake ideally suited for drop and swap

locks. This versatility expands the ability of the Seasnake to get cargoes efficiently from Duluth-Superior and anywhere on the Great Lakes to Montreal and back. A Seasnake marine train of a 35 foot draft SS35 would also be capable of transiting the seaway, but would have to be light loaded until it reached the Atlantic Ocean and deep water.

Next steps

Unfortunately, the Seasnake has yet to be constructed and is awaiting a financial partner with the wherewithal to finish the design and construct a prototype. The inventor is willing to provide substantial equity in the design to the right partner.

ABOUT THE AUTHOR

Edward Anderson is the Vice President of Operations and Technology for Seasnake Worldwide Marketing, LLC. He is Chairman of the Harbor Technical Advisory Committee (HTAC) of the Duluth-Superior Metropolitan Interstate Council, the Metropolitan Planning Organization (MPO) of Duluth-Superior and serves as the City of Superior representative. A former President and Alderman of the Superior, Wisconsin, city council, he has been involved in harbor planning for the ports of Duluth and Superior. A retired Detective Sergeant of the Douglas County Sheriff's Department, Mr. Anderson presently serves as part-time Chief of Police for the Village of Lake Nebagamon, Wisconsin.

As a young man Mr. Anderson sailed on the Great Lakes for Ford Motor Company during which time he developed a love and respect for the Great Lakes. He left the Lakes and obtained a BS degree In Crisis Management and Police Science from the University of Wisconsin- Superior. Mr. Anderson has served as a volunteer Search and Rescue Pilot, Squadron and Group Commander, for the Wisconsin Wing of the Civil Air Patrol the official auxiliary of the United States Air Force. This is Mr. Anderson's first published article.

Email: edanderson.seasnakewwmllc@gmail.com

ABOUT THE COMPANY

Seasnake World Wide Marketing, LLC, a Delaware Corporation, was formed in June 2009, by Michael G. Okash, James H. Hartung and Douglas Kubic, to assist Seasnake, LLC, owner and inventor Carlos Kountz, market the Seasnake design concept. Ed Anderson joined the marketing effort in September of 2009.

ENQUIRIES

Mr. Michael Okash, CEO
Seasnake Worldwide Marketing, LLC.,
115 Royal Palm Circle, Largo, Florida, 33778, (winter months) or:
P.O. Box 426, Superior, WI 54880 (Summer months).
Phone (United States) 218-343-2009
Email: seasnakewwmllc@aol.com
Web: www.seasnake.net

Oil, Gas and Chemical Handling

"OpenTAS can not only handle all the loading operations of the vessels at the berths, it is an integrated solution that ties in intelligently with APTs existing vessel scheduling and SCADA software."

'Optimised ship loading at Marine Terminal Immingham, UK,' page 60.

Optimised ship loading at Marine Terminal Immingham, UK

Associated Petroleum Terminals (APT) optimises planning, loading, inventory management and administration with OpenTAS

Jasmin Phipps, IT & logistics journalist

The challenge of IT systems is that they need to be integrated to be most efficient. APT decided to face this challenge. In 2010 APT was looking for a new integrated IT solution to replace the current system as it could no longer meet the requirements. APT has chosen Implico's terminal management and terminal automation system OpenTAS to provide this one-point solution that fulfils all the needs in terms of planning, loading, inventory management and administration of the terminals.

APT is a joint venture of Phillips 66 and Total located in Immingham, UK on the North Sea coast. The two companies each have a refinery in the area and share terminals to manage their loading and shipping operations. They have 33 different petroleum products and they transport them via sea freight. At four main berths for deep sea vessels and five smaller berths, APT is running a 24/7 operation to load 20 million tonnes per year. APT has 57 employees that work in three shifts.

APT opts for OpenTAS to replace outdated IT system

In 2010 APT decided that it was time to substitute its aging IT system with a more efficient integrated solution that could fulfil all its requirements. APT had an IBM business system in place, but it was reaching the end of its lifespan. It was hard to make changes to the system so APT started to use spreadsheets to record certain data. These spreadsheets needed to be updated manually and the information wouldn't feed back into the business system. Support and maintenance of the IBM system started to be a challenge as well.

OpenTAS was selected as it is able to integrate all software programs and spread sheets in use at APT. It automates all the processes at the facility in terms of loading and unloading the ships' cargo including the planning, inventory management and administration. In addition OpenTAS integrates seamlessly with SAP. Both Total and Phillips 66 were already using OpenTAS at various sites and this was a key factor in the decision to use the proven system OpenTAS at APT as well.

OpenTAS is implemented to integrate and automate all business processes at APT

Implico began with the implementation of OpenTAS in February 2011. The first step was to look at the business processes at APT to be able to create an in-depth gap analysis. The gap analysis would define what requirements APT had for the OpenTAS system. Based on the outcomes, Implico built a project plan that would be the guideline for the integration and automation of all processes in place. After 13 months OpenTAS was launched on March 1st, 2012.

Key benefits of the OpenTAS system

The advantages of the OpenTAS system include the improvement of the scheduling processes for berth occupancies to determine which berth is used by which vessel at what time. OpenTAS can automatically receive and upload plans from Total and Phillips 66 so that APT can forecast vessels a month in advance. Being able to plan so far ahead is crucial for the business. OpenTAS provides the necessary automation to keep the planning up to date at all times. APT could have contracts

One of the key benefits: Forecasting of vessels up to a month in advance


© Implico
Efficient tanker loading


© Corepics VOF, Shutterstock.de
The aim: minimising the laytime and demurrage

without specifying a certain vessel yet. They just know the approximate size of the vessel, the loading time and the product type. Over time the missing information would be filled in.

APT used to manually enter the data into the scheduling system Seaberth but this is no longer necessary. OpenTAS is able to send the updated specifications automatically to the scheduling system Seaberth seamlessly through an interface. Seaberth then defines which berth can be used for loading and the user has the possibility to refine the planning further – for example the vessel would be scheduled for loading at berth six. The user can now decide to use tank 105 making the planning process more precise.

Another key benefit is the integration of OpenTAS and the existing AllenBradley SCADA system. APT sends orders to the AllenBradley system and receives the loading results back. APT would need to make hourly tank dips and hand-write the results which would then be brought to the accounts department. This is no longer necessary. OpenTAS automatically receives and stores the information, instantly providing a real time inventory of the tanks current holdings. The net gain is that inventory management is improved while also ensuring that products are always available in the right quantities when they are due to be loaded.

OpenTAS provides another advantage by integrating delays that contribute to demurrage. Demurrage is a cost associated with delay in the vessel. Contractually APT has a certain time to load a vessel as agreed between the shareholders and the ship owners. If APT falls outside these time frames then there are costs involved and there is a whole set of rules associated to those. Demurrage costs can be significant and that is why it is very important that APT meticulously logs the delays. They run a time sheet for every vessel in which they record various times for operations with time stamps, e.g. when the ship comes to anchor, when it leaves anchor, when it comes to berth etc. For all of those times APT can enter a delay time and a delay reason. These might be mitigating further circumstances in the demurrage argument.

Another benefit of OpenTAS is increased flexibility in making changes to product names. As APT is a service provider for both Total and Phillips 66 they are dealing with a large variety of products and name changes can happen frequently. OpenTAS allows users to rename products easily and flexibly. If a user changes the name field in one place all papers will be updated automatically.

A further advantage of OpenTAS is the automatic generation of forms, custom papers and other documents. This minimises the transmission errors caused by manual input and improves data quality, so that accounting is always accurate and up to date. All data is now in one central location that can be accessed by everybody.

Summary

By choosing Implico's solution OpenTAS, APT was able to bring its IT system up to date. OpenTAS can not only handle all the loading operations of the vessels at the berths, it is an integrated solution that ties in intelligently with APTs existing vessel scheduling and SCADA software. It fulfils all the requirements at APT. "OpenTAS manages all processes from taking the contractual nomination, through to the operational service order, recording the resource of the loading against that, and producing the paperwork conforming to Customs‘ requirements" explains Ian Wray, APT project manager. "OpenTAS smartly connects systems and processes in one place. That wasn't possible before," adds Jakob Burchardt, Implico project manager.

OpenTAS also ensures consistency with APTs shareholders Total and Phillips 66 who both use OpenTAS and SAP. OpenTAS will tie in seamlessly into their SAP systems so that APT can receive nominations directly from its shareholders. The SAP integration will be achieved in the next phase of the collaboration between APT and Implico. Ian Wray is looking forward to the next project with Implico. He said: "We are planning to work with Implico for the SAP integration next. We are hoping to achieve this soon."

ABOUT THE AUTHOR

Jasmin Phipps, freelance IT journalist, is an expert in the field of logistics, oil & gas and waste management. She was born and raised in Germany and studied economics in Germany and France. Jasmin currently lives and works in Canada.

ABOUT THE COMPANIES

APT (Immingham) Ltd. was established in 1966 and manages the marine activities for the two local refineries owned by its shareholders Total and Phillips 66. With its staff of 57, the service provider manages inbound and outbound deliveries of 33 different petroleum products across the marine terminals for the two oil refineries in Immingham. In a 24/7 operation APT loads 20 million tonnes per year.

As an international consulting and software company, **Implico** supports oil and gas companies worldwide in optimising their business processes. The company was founded in 1983. Headquartered in Hamburg, Germany, the Implico Group has subsidiaries in the UK, Malaysia, Romania, Switzerland and the US. The fast-growing Implico Group currently employs around 250 staff.

ENQUIRIES

Chris Williams
Implico UK Ltd.
7 Canute House, Durham Wharf Drive,
Brentford Lock, Brentford, TW8 8HP, UK

Key research into LNG behaviour in shallow water

Arne Van der Hout, harbour and offshore technology department, Deltares, The Netherlands

Long waves and moored vessels

Long waves, although hardly visible, can cause large problems for moored ships. Over the last decade hydrodynamic research has focused on deep and ultra-deep water developments. However, recent experience with the development of offshore liquefied natural gas (LNG) terminals has shown that the issues related to shallow water hydrodynamics are at least of similar complexity. For example, low frequency wave effects such as set down (or infragravity waves) can result in significant excitation, while streamlined LNG carrier hulls have a very low damping effect against low frequency motions such as surge. The combination of excitation and low damping can result in significant resonant motions and related mooring loads. While more and more LNG terminals were built in shallow water, with water depths of approximately 15 – 40 metres, a better understanding of these shallow water hydrodynamics was desired.

The HAWAI project

In 2006 a joint industry project (JIP) was started that aimed to explore shallow water wave dynamics in order to provide reliable wave information leading to optimal offshore LNG facility designs. In this JIP, a number of organisations contributed to the research project, with all participants benefitting from the developed knowledge. Deltares was one of the partners that contributed to this project of 24 participants. The project was led by MARIN and other partners involved were, amongst others, Bureau Veritas and Single Buoy Moorings as well as the Delft University of Technology. The project, which was called HAWAI - short for shallow water initiative – ran from 2006 to 2007.

HAWAI recognised that the development of reliable offshore LNG terminals in shallow water locations requires an improved insight into the hydrodynamic effect of sea conditions in such areas. HAWAI investigated not only wave and current conditions at a number of representative mooring locations, but also ship motions and mooring structure loads that could be expected in such environments. Variables such as water depths, ship draughts, seabed contours and wave frequencies were also be accommodated and, in addition, the project investigated the applicability of model testing techniques for shallow water operational scenarios.

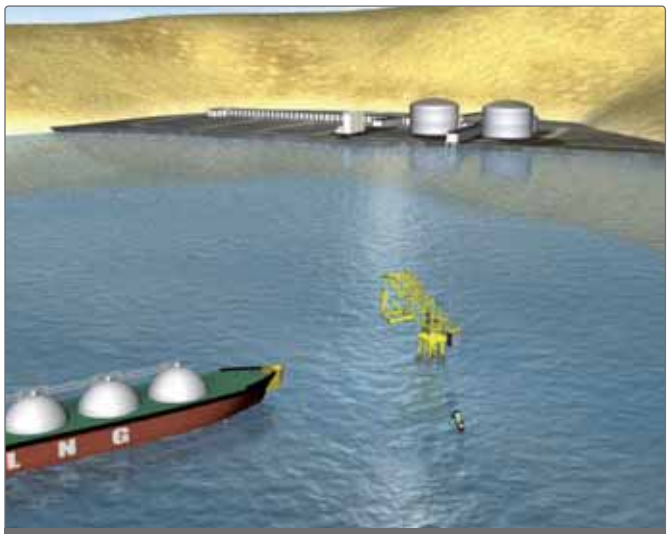

Artist's impression of a near shore LNG terminal

By using the combined expertise of offshore hydrodynamics and coastal engineering, the project resulted in an improvement of knowledge of shallow water physics that are important for the design of offshore LNG terminals. The results provided the participants with a better understanding of ship motions and mooring prediction methods in sea conditions common to such areas.

The second phase

Although the first HAWAI project already provided much insight in the complexity of the wave conditions in shallow water areas, a practical methodology on how to apply this knowledge in the design of a terminal was still missing. From a designer's point of view, there was a need for practical and generic guidelines. Therefore, in 2009 a follow up of the HAWAI project was started, named HAWAII. The aim of this second project was to develop a practical design methodology for near shore shallow water LNG terminals, making use of the insights gained in the first HAWAI JIP. The majority of the 24 original participants also joined together for this follow-up project.

In the HAWAII JIP, a practical design methodology was proposed. This methodology was illustrated with a case study involving the design of a LNG terminal for a fictitious but realistic shallow water mooring location. In this case study, each step of the developed design methodology is performed, starting with obtaining the offshore wave climate and concluding with a final estimate of the expected downtime at the near shore mooring location. This case study showed how the design methodology can be applied in a practical, realistic situation. The HAWAII JIP resulted in a concise design methodology, providing practical guidelines for a step-by-step design approach. In each step the relevant physical processes are identified and guidelines are provided on how to account for it.

Developing tools

Next to this step-wise design methodology, several tools have been developed within this research project and delivered to the participants. These tools consist of methods to:

- Estimate low-frequency wave conditions at a near shore mooring location;
- Compute hydrodynamic loads related to the low-frequency waves that are present at the mooring location;
- Estimate line forces and vessel motions.

The application of the design methodology in the case study showed the relevance of correctly predicting the near shore

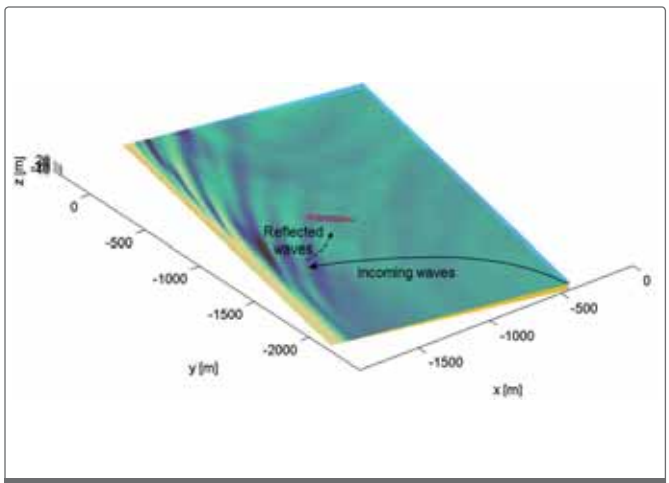

Example of low-frequency waves reflecting off a coast, showing the relevance of a correct prediction of low-frequency wave directions at a near shore mooring location

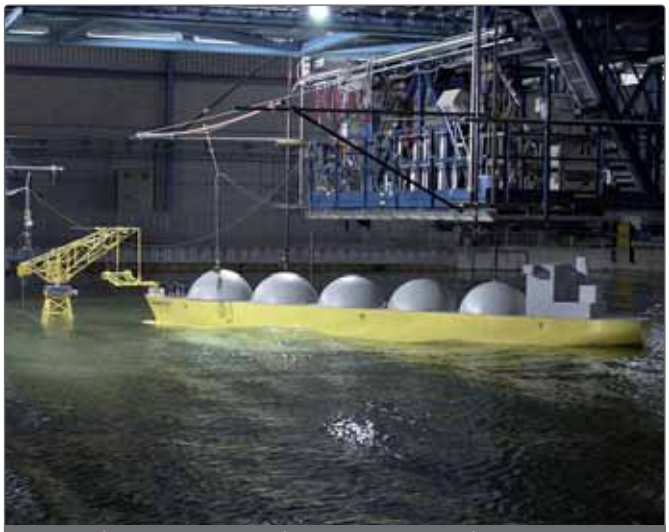

Example of scale model tests performed at Marin in the first JIP HAWAI

shallow water wave conditions. It was shown that low-frequency waves can have a significant effect on expected downtime and a correct prediction of the low frequency wave spectra at the mooring location is required for a correct downtime prediction. Near shore low-frequency wave conditions are largely influenced by the local bathymetry and coastline orientation. Estimation of low-frequency wave reflections off the coast, with correct wave height, period and direction is not trivial. For this, dedicated models that are mainly developed and used in the field of coastal engineering may provide a valuable addition to the tools that generally used for offshore vessel motion prediction.

Scale model testing

The main part of the developed design methodology is based on results of numerical simulations. The applied numerical models are often carefully validated for situations for which they are developed, ie. for coastal applications, mainly with very shallow water depths of less than ten metres. When applying these models in a realistic case study, a reality check can be of great value. One way to verify the numerical results obtained in the design methodology is to perform scale model tests. Such tests are often performed in a final stage of a design process, due to the high costs involved of setting up a physical scale model. When set up carefully, scale model tests can provide a complete representation of the most important shallow water physics at a near shore terminal.

Presently, an initiative has been proposed to the HAWAII JIP participants to finalise the research project by performing scale model tests. These tests will illustrate the use of physical scale model tests in the practical case study and aim to provide validation for the developed models in a realistic mooring situation. The model tests are planned to be performed in 2013 in the Delta Basin of Deltares, which is one of the largest shallow water wave basins in the world, measuring approximately 50 metres by 50 metres.

Safer designs

The HAWAI and HAWAII JIPs showed that for the correct prediction of moored vessel motions and mooring line forces in a shallow water wave environment, a combination of model tools that are presently used in both maritime and coastal engineering fields is required. Combining the knowledge of those fields will result in safer designs of near shore terminals.

ABOUT THE AUTHOR

Mr Van der Hout has a MSc degree in marine technology and is a staff member of the harbour and offshore technology section at Deltares. He works on hydrodynamic topics related to nautical activities in and around harbours, including ship manoeuvring and moored-ship studies. He is involved in research and development projects regarding low-frequency waves, passing ships and in the development and testing of several hydraulic mathematical models.

ABOUT THE COMPANY

Deltares is an independent institute for applied research in the field of water, subsurface and infrastructure. Throughout the world, Deltares works on smart solutions, innovations and applications for people, environment and society. The main focus is on deltas, coastal regions and river basins. Managing these densely populated and vulnerable areas is complex, which is why Deltares works closely with governments, businesses, other research institutes and universities at home and abroad.

ENQUIRIES

Deltares
P.O. Box 177
2600 MH Delft
The Netherlands
Tel: +31 (0)88 335 8008
Fax: +31 (0)88 335 8582
Email: Arne.vanderHout@deltares.nl
Web: www.deltares.nl

Q&A with

Tom Van Tendeloo, marketing manager, Weise & **Martin Dicke-Kuenitz**, director technology and innovation, Emco Wheaton

Port Technology International recently sat down with two of the key decision makers at two of the industries largest manufacturers of marine loading arms. Weise's Tom Van Tendeloo and Emco Wheaton's Martin Dicke-Kuenitz discuss the latest technologies and issues affecting the operation of loading arms today.

What is the major factor that affects loading arms during ship-to-shore transfer of LNG or other liquids at a terminal?

TVT: This all depends on the specialist characteristics of the product and their required safety specifications. Loading arms used to have a ball valve or a manual Quick Connect / Disconnect Coupler (QCDC), now there is a lot asked of the Emergency Release Couplers (ERC) for hydraulic QCDCs and these also need to be suitable for product application.

MDK: None from a purely operational point of view. Once a carrier is safely moored the transfer goes without interference. On an availability / maintenance aspect the presence of educated operators and sufficient service does impact, i.e. if the arms are not properly serviced they may not be available once a carrier is moored.

Excessive tanker movement can cause mechanical damage which can cause fires, spillage, explosions and danger to personnel. How do you protect the arms against this?

TVT: This is what we use the ERCs for, so we have a dedicated working envelope for the marine loading arms. In the case of an emergency, an alarm signal is sent to the operators so they can shut the pumps and close the valves, and the ERS will disconnect the arm from the ship so only a minimal amount of spillage occurs.

MDK: This kind of excessive tanker movement is only seen on real offshore ship to ship transfers. There are jetties that reach 8 kilometres into the open sea, tanker movement in these jetties is quite large, however once the arms are connected they are safe and will follow ships motions without a problem. In some cases where there is a high swell or wind the vessels move so much that the arms can not be connected. This is normally over after one or two hours and then connection can be done.

©2013 Kanon Loading Equipment

The basic philosophy in the design of marine loading arms is to provide a reliable and safe connection between tanker and jetty. What in your view have been the recent industry innovations that have contributed to this?

KANON
LOADING EQUIPMENT

your partner in high quality loading, unloading and safety systems for over 30 years

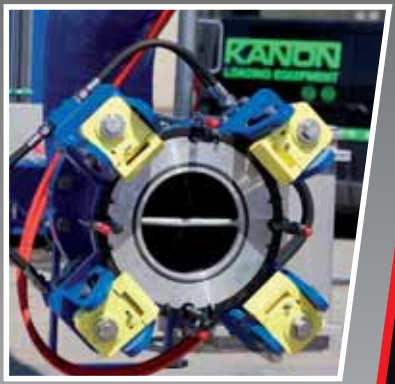

Kanon Marine Loading Arms

Symmetric Design, Excellent Performance

www.kanon.nl

Loading equipment for marine, road and rail tankers

TVT: Firstly, the use of ERCs and QCDCs have become more and more common. Normally we would use manual couplers for smaller loading arms so operators do not need to use a flange for the connection to their ship. In addition, end users are also investing more and more in hydraulic QCDCs.
MDK: As mentioned before the oil and gas industry is very conservative. There have not been any significant novelties in this market with regards to standard shore based installations. The novelty we see emerge at this point in time is the offshore ship to ship transfer as it is needed in floating LNG projects.

Marine loading arm technology and design has stayed relatively the same since they became available some 25-30 years ago and some feel they have reached the maximum envelope of design. Do you see this changing? What future developments or ideas do you think may change or affect loading arm designs?
TVT: We still base our design on the concepts of 20 years ago - only there are now more possibilities. For example, some manufacturers already have double loading arms with two product lines on one loading arm. We ourselves make loading arms on mobile trailers so they can be moved over the dock and connect to different pipelines so we no longer need six marine loading arms. So the concept stays the same but more and more accessories are becoming available.
MDK: There is no reason why the envelope of design could not be extended. We need to consider however that the arms are only a part of the entire loading / unloading setup. There is no real benefit in making "better" loading arms when at the same time the mooring system or the breasting dolphins only allow certain limits in ship mooring and movement etc.

To accept extreme temperatures of + 250° or -190°, special alloys and stainless steel have to be used. Does this mean hoses are obsolete in these applications?
TVT: When you have a small tear or leakage in a hose you cannot stop it, yet with a loading arm it is detectable. At the swivel joints you can notice a small leakage, so you can prevent both environmental disasters and human injury.
MDK: Hoses are always a good solution if there is a jetty that has to handle 10 or more different products and where there is no space for 10 different arms. With regards to temperature or the use of other materials other than steel there is no limit to the loading arms.

In your opinion, due to increasing demand to expand terminals with some still facing space constraints, do you see the demand for multi-product loading arms increasing in the future?
TVT: As yet we have not so we still just have single product loading arms, but what we are finding is more and more enquiries for the aforementioned loading arms on a trailer. So yes there is demand for the design of loading arms to be more flexible.
MDK: Multi product arms are already in use, especially in terminals where cross contamination is not of a big concern, There are jumper arms installed behind the loading arms that allow operators to connect the loading arms to several different pipelines on the jetty/tank farm.

What are the main selection criteria when considering a loading arm to operate in areas susceptible to either hurricanes or seismic activity?


©2013 Kanon Loading Equipment

TVT: This depends on the site conditions, and as to whether it is on a jetty with concrete or at sea. For this we have two types of loading arms, one with a self supporting structure and one with a separate supporting structure. Most of the time customers opt for the one with a separate supporting structure as the piping is not under as much stress in adverse weather conditions.
MDK: Normally one factor governs the other, but in principle for the design of the arm it does not matter whether it is wind that puts additional loads to the structure or movement of the earth.

Ultra large crude and gas carriers are getting even larger and there is no recent update on standard/regulation or legislation affecting loading arms at oil and gas terminals. Do you feel manufacturers are doing enough to ensure safety levels with loading arms supplied are in line with the increased operational requirements placed by these vessels?
TVT: We keep looking for safer technologies and accessories but the price remains important to the customer. For example, the hydraulic QCDC costs around a fourth of the entire cost of the marine loading arm. So we keep looking but it would be helpful if more companies followed our lead.
MDK: I can not give an answer to this question. Normally we receive an enquiry for an arm with a specific operating envelope, we hardly ever get information of the tankers other than the standard information on cargo manifold location.

PLCs are increasingly being used to operate loading arms. What operational benefits do these provide?
TVT: One of the most important advantages is that the operator does not have to be very close to the loading arm, as the PLCs are used for the hydraulic operations of the loading arm. Therefore, operators can just move the loading arms to the ship from a distance, which is especially useful in the transfer of dangerous products as the less people that have to be in the vicinity of the loading arm during the connection, the easier and the safer.
MDK: PLCs are more flexible in programming and less space consuming.

Environment, Health and Safety

"Regulations prohibiting oil release at sea should be revised to improve the efficiency of operations, but also to be able to conduct experiments at sea."

'Recovering oil from the Deepwater Horizon spill' page 72.

Towards excellence in port environmental management and sustainability

Dr Antonis Michail, policy advisor, ESPO

What is a green port? How can a port authority respond to the environmental challenges relating to port operations? What is the vision of European port authorities towards that direction? Can a common framework for action be developed while respecting the diversity of ports? All these questions are being addressed in the European Sea Ports Organisation (ESPO) Green Guide; towards excellence in port environmental management and sustainability' that was published in October 2012. Far from being a merely promotional tool of the evidence-based progress that European port authorities have achieved over time, the Green Guide demonstrates a common approach for action and a range of options towards further and continuous environmental improvement.

Background

The 'Environmental Code of Practice of 1994' was the first official policy document that was ever published by ESPO, just one year after the establishment of the organisation. The code was then updated in 2003 and the recently published Green Guide is the third edition through which the sector defines its environmental ambitions.

Front cover of the Green Guide

The main aim of the Green Guide is to trigger port authorities to be proactive and to commit to sustainable development and the continuous improvement of their environmental performance. With this focus, the guide demonstrates options and approaches, without losing sight of the fact that each port is unique. Overall, the ESPO Green Guide favours a bottom up approach, in which port authorities are proactively taking responsibility and living up to the expectations of the community. It encourages ports to be responsible for their own initiatives, to benchmark their performance, and to deliver science-based evidence of achievements.

Five principles

There are five long standing principles guiding the efforts of the European port authorities in addressing their environmental challenges:

- Achieving voluntary self-regulation that raises standards beyond regulations through a bottom-up approach
- Cooperating and sharing of knowledge and experience on environmental matters
- Serving in parallel the interests of both the business and the local communities aiming towards the sustainable operation of port areas
- Applying a systematic approach to port environmental management through appropriate structures that enable continuous improvement of performance
- Being transparent in communicating and reporting on the ports' efforts and environmental performance.

Encouraging common action with the 'five Es' approach

A major innovative element of the ESPO Green Guide is the introduction of a common framework for action that demonstrates the range of options that are available while respecting port diversity. The Green Guide calls upon European port authorities to continuously work towards improving their environmental performance through focused action on:

- Exemplifying: Setting a good example towards the wider port community by demonstrating excellence in managing the environmental performance of their own operations, equipment and assets
- Enabling: Providing the operational and infrastructural conditions within the port area that facilitate port users and enhance improved environmental performance within the port area
- Encouraging: Providing incentives to port users that encourage a change of behaviour and induce them to continuously improve their environmental performance
- Engaging: with port users and/or competent authorities in sharing

TABLE ILLUSTRATING THE PROGRESS ACHIEVED BY EUROPEAN SEAPORTS ON SELECTED INDICATORS OVER TIME

Environmental Management component	1996 %	2004 %	2009 %	2012 %	Percentage change (2004-2012)
Does the port authority have an environmental policy?	45	58	72	91	+33
Is the policy made available to the public?	-	59	62	85	+26
Does the policy aim to improve environmental standards beyond those required under legislation?	32	49	58	73	+24
Does the port publish an annual environmental review or report?	-	31	43	62	+31
Does the port have designated environmental personnel?	55	67	69	95	+28
Does the port have an environmental management system?	-	21	48	62	+41
Is environmental monitoring carried out in the port?	53	65	77	80	+15
Has your port identified environmental indicators to Monitor trends in environmental performance?	-	48	60	71	+23

knowledge, means and skills towards joint projects targeting environmental improvement in the port area and the logistic chain

- Enforcing: Making use of mechanisms that enforce good environmental practice by port users where applicable and ensuring compliance.

It should be noticed that the enforcing element is seen by port authorities as a last resort instrument in line with their belief that a lot can be achieved through cooperation and common understanding in line with the principle of self-regulation.

A common approach does not necessarily result in a common level of responsibility for all port authorities. It is for each and every port to assess its own responsibilities regarding the specific nature of the challenges it faces. The Green Guide is not aiming to define a 'one-size-fits-all' type of response but options that would be applicable to all port authorities. Recognising the need for individual flexibility, the Green Guide leaves enough room for individual port authorities to define their own policies and to implement actions, relative to their respective position in terms of governance, financial means, competences and market power.

Application on five major environmental issues

Providing substance to the 'five Es' framework, the guide applies it to selected environmental priority areas. The environmental priorities that are explicitly addressed are: air quality management; energy conservation and climate change; noise management; waste management and water (both consumption and quantity) management.

The level of analysis for each priority first highlights the main associated challenges and the drivers for action by the port authority in the respective field. Then guidance is provided in terms of potential response options classified under the framework of 'five Es', namely under Exemplify, Enable, Encourage, Engage and Enforce. Therefore, the way that ports can respond to the identified challenges by making full use of their competences as landlord, infrastructure manager, service provider, area manager or regulator, is systematically addressed.

Furthermore, and in order to provide substance to the outlined guidance, the Green Guide is accompanied by an online annex of exemplary response options and good practices that are implemented in European ports. The examples demonstrate evidence and application of the theoretical 'five Es' framework in practical terms. The annex is dynamic, subject to ongoing review and available online through the ESPO website (www.espo.be).

Evidence of progress over time

ESPO has been monitoring selected environmental management indicators since 1996. The aim was to monitor trends over time that would highlight tendencies and assist both the sector and policy makers.

Clear evidence of progress is demonstrated for example, by the increasing trends for ports to produce an environmental policy and to publish an annual environmental report. They are establishing activities and procedures to manage their environmental risks such as designating environmental personnel, having an environmental management system, and monitoring environmental performance by the systematic use of environmental performance indicators. The trends demonstrate that a lot has been achieved through voluntary self-regulation in the sector.

Moving forward

ESPO is most encouraged by the positive trends and considers them as triggering factors for its member ports to continue evaluating and further improving their environmental performance. ESPO's commitment to increasing transparency in the port sector is demonstrated through its long standing support for the EcoPorts monitoring and reporting mechanisms. Also, more recently through taking the initiative with the Port Performance Indicators – Selection and Measurement (PPRISM) project to further establish a monitoring and reporting culture. The Green Guide builds on the existing tools and methodologies and the established reporting mechanisms and embraces them within its comprehensive framework. ESPO encourages its member ports to commit to this framework and to work towards achieving excellence in port environmental management and sustainability.

The vision of EcoPorts has been to create a level playing field on port environmental management in Europe through the sharing of knowledge and experience between port professionals. EcoPorts serves the principle of 'ports-helping-ports' and promotes continuous improvement of performance through voluntary self-regulation. Since 2011, EcoPorts has fully integrated in ESPO and, through www.ecoports.com, ESPO offers the opportunity to its member ports to use the well established tools, Self-Diagnosis Method (SDM) and Port Environmental Review System (PERS).

With the PPRISM project, ESPO has taken a first step in establishing a culture of performance measurement in European ports. The two year project, co-funded by the European Commission, delivered a shortlist of indicators that form the basis of a European Port Performance Dashboard (http://pprism.espo.be/).

ABOUT THE AUTHOR

Dr Antonis Michail has a background in engineering (Technical University of Crete - 2001), holds a Masters in environmental management (University of Amsterdam - 2003) and a Doctorate in the environmental management of the logistics chain (Cardiff University - 2008). In 2009 Dr Michail joined ESPO as a policy advisor. Within ESPO he is responsible for the coordination of the Sustainable Development and the Marine Affairs and Security Committees. In parallel, and in line with the full integration of EcoPorts in the structure of ESPO, Dr Michail is responsible for the overall coordination of the EcoPorts Network and the service chain of the EcoPorts tools.

ABOUT THE ORGANISATION

The European Sea Ports Organisation was founded in 1993. It represents the port authorities, port associations and port administrations of the seaports of the member states of the EU and Norway. ESPO has also observer members in several neighbouring countries to the EU. ESPO ensures that seaports have a clear voice in the EU. The organisation promotes the common interests of its members throughout Europe and is also engaged in dialogue with European stakeholders in the Port and Maritime sector. ESPO works through a permanent secretariat in Brussels, a General Assembly, an Executive Committee, and eight specialised committees.

ENQUIRIES

European Sea Ports Organisation - ESPO vzw/asbl
Treurenberg 6, B-1000 Brussel/Bruxelles
Tel: 32 2 736 34 63
Fax: 32 2 736 63 25
Email: mail@espo.be
Web: www.espo.be

Plug in to green power

Pre-designed ShoreBoX solution for a lean shore connection system integration in your port

Cut emissions in your port the most simple and cost-efficient way:

Minimised engineering time and costs

- Pre-packaged solution made of standard, proven components
- Easy installation and commissioning
- Easy maintenance
- Compact footprint for minimum impact at berth
- Available worldwide

Scalable and mobile

- Minimise your energy consumption by optimising the available power
- Adapt your investment to evolving power needs

Experts in onshore and onboard solutions

- Benefit from more than 90 years' experience in the marine industry
- Get best-in-class performance in both your onshore and onboard shore connection systems
- Receive the support you need thanks to our worldwide presence and standardised solutions and architectures

Get best-in-class berth operations

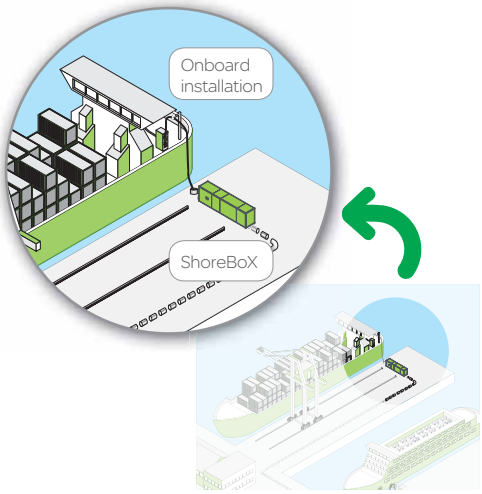

The ShoreBoX™ onshore solution has a minimised footprint to allow for maximum free space at berth.

Optimise your energy management and usage, and minimise your operational costs and carbon footprint with our energy management systems and services.

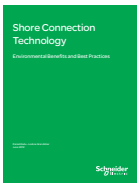

Learn more about the shore connection technology and download our FREE white paper!

Visit www.SEreply.com Key Code 31023p

Schneider Electric™

Recovering oil from the Deepwater Horizon spill

Georges Peigné, deputy director, Cedre, Brest, France

In the immediate aftermath of the explosion and fire on the Deepwater Horizon (DWH) oil rig, BP activated its two Oil Spill Response Organisations (OSRO). Without delay, both organisations mobilised the equipment they had available in the Gulf of Mexico, including offshore recovery equipment, considered to be the best in the US, in the hope that these resources would be able to contain and recover the oil from the MC252 well before it could affect sensitive areas of the shoreline.

Rapidly, as the spill escalated and vast quantities of oil escaped from the offshore recovery system, the efficiency of the equipment deployed was called into question. Recovery at sea was considered less effective than anticipated. The sea state, even when fair, hindered operations. Encounter rates were low, with some skimmers being unsuitable for the type of oil or unable to operate in the large, thick slicks of fresh oil around the well. When modern devices were eventually imported from Europe, and deployed alongside the American devices, they proved to be capable of operating in rough seas and recovering larger quantities of oil.

For slick containment and recovery, in total over 6,000 vessels were mobilised, forming a fleet including tugs, barges and oil spill response vessels fitted with specialised equipment (floating booms and skimmers), as well as a fleet of fishing vessels contracted by BP. The extensive involvement of fishermen partially compensated for their loss of revenue. Some of them directly contributed to in situ burning operations, but the majority were tasked with supporting containment and recovery operations at sea, as well as towing sorbent booms in inshore waters. Mechanical recovery resulted in the collection of around 224,000 metres cubed of oil-water mixture representing, after settling, 3 to 4 per cent of the crude oil spilt and according to estimations, between 8 and 15 per cent of the emulsified oil present at the sea surface.

Difficulties encountered

Offshore competition with dispersant application and in situ burning and inshore competition with the protection of sensitive sites penalised recovery in a number of ways: by not always allowing access to areas where it could have been the most efficient option (thick slicks treated by other methods); by not always providing appropriate aerial guidance means (to remain in contact with the thickest parts of slicks, to work for as long as possible each day);

by not providing optimal logistics, in particular in terms of vessels of opportunity (VOO).

Offshore recovery

A week after the rig sank, the offshore recovery branch consisted of 26 vessels capable of working in deep water, seven dedicated tug boats and three offshore oil storage barges. In total, over 60 offshore skimmers were used at the height of the response, mainly deployed by 12 specialised vessels and several US coast guard vessels.

This capacity to mobilise resources is seen as a resounding

GULF OF MEXICO - Crewmembers from U.S. Coast Guard Cutter Harry Claiborne observe the operation of a Vessel of Opportunity Skimming System that they placed into the Gulf, May 8, 2010

© U.S. Navy photo by Stephanie Brown, Naval Sea Systems Command

Skimming Near the Source

© U.S. Navy photo by Stephanie Brown, Naval Sea Systems Command

Oil in Skimmer's Boom

success by the oil industry, yet the offshore response faced several limitations. For safety reasons, operations could not be implemented less than nine kilometres (five nautical miles) from the source, meaning that vessels were responding to thin slicks and therefore performed relatively poorly. Operations were also limited by the sea state, with most skimmers, as well as the associated booms, unable to operate beyond sea state three.

Equipment management

The large-scale influx of equipment rapidly required it to be identified, inventoried, deployed and monitored. The lack of an exhaustive database updated in real time for all the equipment available to the OSROs in the US was a limiting factor for the organisation of operations.

Mobilisation and performance of skimmers

In total, 750 skimmers were mobilised, including 72 offshore skimmers, 155 near shore skimmers and 522 inshore skimmers. The efficiency of the offshore skimmers is difficult to quantify. Throughout operations, reports only indicated the quantities of oil-water mixture recovered and not the quantities of pure oil. Furthermore, given the lack of basic data, it was difficult to compare the efficiency of the various skimmers deployed.

Until this spill, the effective daily recovery capacity (EDRC) introduced in 1993 in the wake of the 1990 Oil Pollution Act (OPA), was the reference used in terms of response preparedness to assess the capacity to treat a given size of spill by recovery at sea. This assessment was based solely on the expected performance of skimmers, taken either from values measured during tests or simply from a certain percentage of the pump's flow rate.

The DWH spill appears to have highlighted the fact that many other parameters affect the efficiency of recovery operations at sea. This explains why the performances obtained for this spill were far poorer than what could have been expected.

Storage of recovered oil at sea

Mechanical recovery operations were technically restricted by the limited oil storage capacity at sea and initially, by regulations in force on acceptable contamination levels for water released into the environment after settling.

Vessels of opportunity

In terms of mechanical recovery, the rapid mobilisation of a fleet of VOOs – fishing vessels (shrimp and oyster boats in particular) fitted out and adapted for pollution response (skimming arms, pumping/storage equipment) – constitutes one of the key lessons in terms of their integration within the overall response at sea.

A few lessons learned

Among the lessons learned by the US authorities and the oil industry, the following points can be highlighted. There is a need to improve containment/recovery capacity, in particular in rough seas. There is a lack of research on large recovery systems and on increasing encounter rates. There is a requirement to revise the EDRC calculation method and improve systems and tools for guiding recovery operations, in particular by determining slick location and thickness. Regulations prohibiting oil release at sea should be revised to improve the efficiency of operations, but also to be able to conduct experiments at sea. It has been requested that US coast guards organise updating of the inventory of available equipment. There is also a need for training by the US coast guard for all levels of responders on the optimal use and efficiency of recovery equipment in near shore waters and its limitations in the case of use in non-ideal conditions. There has been a recommendation made that the US coast guard should request that IMO establishes an international inventory of the equipment that could potentially be made available in the event of a major incident. Great benefits could be created by setting up a national VOO policy with integration in contingency plans, training, mobilisation, coordination and compensation.

This article is based on a bibliographic survey carried out by Cedre (Ivan Calvez, Loic Kerambrun and Georges Peigné) on the various operations conducted to control the Deepwater Horizon oil spill in the Gulf of Mexico

ABOUT THE AUTHOR

An engineer in naval construction, **Georges Peigné** joined Cedre in 1980, where he has been involved in the testing and validation of spill control equipment and techniques. He has been personally involved as adviser in all the major oil spills Cedre had to deal with. Deputy Manager of Cedre, he is now in charge of co-ordinating all R&D activities conducted by Cedre as well as emergency response to any type of accidental water spillage.

ABOUT THE COMPANY

Cedre is the French Centre for Documentation, Research and Experimentations on accidental water pollution. Its experience and services encompass all aspects of experimentation, training, documentation, and techniques required to successfully face all aspects of accidental spills. Cedre can advise on technical response, from slicks monitoring and prevision to pollutant recovery and waste treatment, on strategy and communication, from hazard assessment to public information, on post-emergency requirements. Since its creation in 1978, Cedre had been called for advice or direct on-site assistance worldwide in over 2000 accidental spills of all types and extent, in freshwater or at sea.

ENQUIRIES

Cedre, 715, rue Alain Colas, CS 41836, 29218 BREST, cedex 2, France
Tel: +33 (0) 2 98 33 10 10
Email: contact@cedre.fr
www.cedre.fr

VTS, Navigation, Mooring and Berthing

"As vessels have grown larger and more diverse, so have the demands on fenders."

'Developing efficient marine fender solutions', page 80.

Catching the whale, controlling large ships in ports

Johan Dekker and **Jos van Doorn**, MARIN's nautical centre MSCN

On 16 December 2012 the CMA CMG Marco Polo made her first call at the Port of Rotterdam. This box ship with a capacity of over 16,000 twenty-foot equivalent units (TEU) and the coming sister ships are presently the largest container vessels in the world, but in a couple of months the first of the Maersk Triple E vessels will take the lead with a capacity of 18,000 TEU. This increase in the size of container vessels and similar developments in other shipping segments (bulk carriers: Valemax, cruise ships: Oasis of the Seas, liquefied natural gas (LNG) carriers: Qmax vessels) puts pressure on the existing port and terminal infrastructure in their ports of call. In this article we take a closer look at the impact of these 'whales' on port operations by considering the latest container ships.

Characteristics of large container vessels

The vessels of the Emma Maersk class (launched in 2006) and the MSC Beatrice class (2009) have called at the large container ports for several years now. The main dimensions of the new Marco Polo class and the Triple E class are not very different from those of the Emma Maersk as the first lines of the table below show. It is interesting to note that the Marco Polo is less wide, but can carry more containers. This is due to the more forward position of the deckhouse, a concept first used for the MSC Beatrice and also applied to the Triple E. Going further down the table below a few interesting differences appear. The displacement of the Triple E is significantly larger while the engine power is 20 per cent less.

This is further demonstrated by showing the ratio between installed engine power and displacement: Maersk Triple E has 30 per cent less power per tonne displacement than the other three vessels. This is mainly because the Triple E will be sailing at a lower speed. Because of the lower speed the Triple E has a more full body; hence the larger capacity and displacement. The wind area is also significantly larger, but the ratio bow thrusters/lateral area is almost equal for the Maersk vessels and better than for the other two ships. On the basis of these characteristics one can conclude that the stopping and turning capabilities of these vessels reduces, whereas the capability to control the bow will remain intact.

Together with the larger wind areas (22.5 per cent increase of lateral area), this has consequences for the role of the tugs when manoeuvring in ports.

Manoeuvring strategy

In many ports the common practice is that the tugs await the ships just inside the protection of the breakwaters. Once the stern tug is attached, the assisted vessel can be kept under control much easier, but as it takes several minutes to transfer and fix the towline, the tugs are only able to assist the vessel when it is already well within the port. But as the large container vessels are responding slower to the engine, the strategies need to be adapted: tugs must catch the 'whale' earlier. For some ports this will mean outside the existing harbour entrance, exposed to waves. Extending breakwaters is a solution for this problem, but preparing tugs, tug crew and pilots to assist in waves may be a more cost-effective alternative. Pilots, tug masters and captains are facing the following issues when receiving these big vessels:

- The tug has to connect and assist in waves;
- Pilots and tug masters have to cope with the slower response of the vessel;
- The big vessels are sensitive to wind.

So they'd better be prepared!

Training

It is important that the pilots and the tug masters are well prepared when the large ships call at the port, especially if such a

TABLE 1: DIMENSIONS COMPARED

Parameter	Unit	MSC Beatrice class	Emma Maersk class	Marco Polo class	Maersk Triple E class
Capacity	TEU	13,798	15,500	16,020	18,000
Length oa	m	366.1	397.7	396	399
Beam	m	51.2	56.4	53.6	59
Depth	m	29.9	30.2	29.9	30.2
Displacement	tons	170,520	213,000	205,700	249,000
Engine power	kW	72,240	80,080	80,080	2x32,000
Bow thruster	kW	2x1700	2x2200	2x1800	2x2500
Stern thruster	kW	-	2x2200	-	-
Frontal wind area	m2	2320	2738	2438	2898
Lateral wind area	m2	13435	13366	15667	16373
Power/Displacement	[kw/tons]	0.42	0.38	0.39	0.26
Bow thruster/lateral area	[kw/m2]	0.25	0.33	0.23	0.31

Figure 1: Pictures from a combined training for pilots and tug masters (for LNG carriers)

Figure 2: Simulating an escort tug in the Desdemona simulator

new strategy for the manoeuvre is required. This can be trained in combined simulations involving both the pilot on the container vessel and the master(s) of the tug(s), each of them sailing his ship from a separate simulator. In this way both technical aspects (eg. the time for the tug to respond to the order of the pilot) and the human aspects of the pilot and tug master cooperation (communication) are fully captured. Figure 1 shows some pictures from a recent training where the pilot was commanding an LNG carrier on MARIN's Full Mission Bridge 1, while two experienced tug masters were sailing the bow and stern tugs on two new Compact Manoeuvring Simulators in a dedicated tug configuration with ASD and winch controls.

When carrying out such simulations, the virtual world must be a good representation of the real world. Though feedback from our clients indicates that – based on some 30 years of experience – we usually get quite close, modelling techniques are continuously further improved making use of the ever-increasing computational power.

Tug effectiveness in waves and tug safety

Connecting and assisting with tugs in waves puts different demands upon the tug and the crew. The tug should be designed and have the necessary equipment for assisting in waves. Detailed research regarding this subject was undertaken by MARIN in the SAFETUG joint industry project.

One of the most critical elements when operating in waves are the loads in the towing line: snap loads might result in line breakage. This can be prevented by installing an active or passive towing winch that smoothens out the line forces. At lower wave conditions using a nylon tail in the towing line is also effective for reducing the snap loads. Another measure that can be taken is minimizing the motions of the tug. The latter also has the advantage that it contributes to crew safety and comfort.

Apart from technical measures to improve performance in waves, the effect of ship motions on human performance was studied in SAFETUG. This was done by executing escort simulations on a fixed-base simulator at MARIN and on the Desdemona simulator. The TNO Desdemona simulator is a cabin with a basic bridge mock-up which can only accommodate one subject (tug master) at a time. Inside the cabin a 210 degree scenery is projected. This cabin is mounted in an advanced motion platform (see Figure 2). The tug master had to execute escort manoeuvres in high sea states, while the cabin moved in the same way the tug master's chair would do on the real tug. To measure his workload the master also had to respond to a secondary task: he had to press a foot switch as soon as the red LED on a special headset turned red.

One of the outcomes of this experiment was that tug captains with more experience performed better when handling a tug in waves. They performed their tasks better at a lower work load. So gaining more experience through training has a positive effect on the overall tug performance.

SAFETUG's results were also used to improve our simulator models. Wave response is tuned towards the outcome of the seakeeping tests and MARIN has the capabilities to model complex winch response in the simulation models. Tug operators can play with the winch settings and experience the effect on line loads when assisting in waves.

Presently MARIN is working on a follow up project which will focus on tug safety and response scenarios in emergency situations.

Wind loads

Another important aspect is the modelling of the wind loads. The wind forces on the ship are usually calculated from the wind speed at 10 metre height of the position of the centre of gravity of the ship and wind coefficients describing the forces (frontal, lateral and turning moment) in relation to the wind speed. These wind coefficients are usually based on wind tunnel measurements for a typical open sea wind profile. While this may give acceptable wind loads for fairly open sea areas, using the same approach is not suitable in port areas. The wind field in the port area is highly complex due to the shielding effects of tank farms, high buildings and other ships, and the wind working on the vessel is not uniform over the length and height of the vessel. The variations of the wind speed over the length of the vessel can significantly affect the manoeuvre. Standard wind tunnel measurements give no clue on such effects and the way it can be taken into account in the simulations.

The effect on the vessel can be both ways: overestimation and underestimation of the wind loads. By applying a uniform wind field equal to the wind on open sea, the effects of surface roughness and shielding by obstacles on the wind field is not taken into account. Recent studies by the Technical University Eindhoven for the Port of Rotterdam show that the effects on the wind speed at lower heights can be significant (see Figure 3). This is of relevance for container terminals where the containers stored on the terminal can have a large effect on the wind profile in the port basin right next to it.

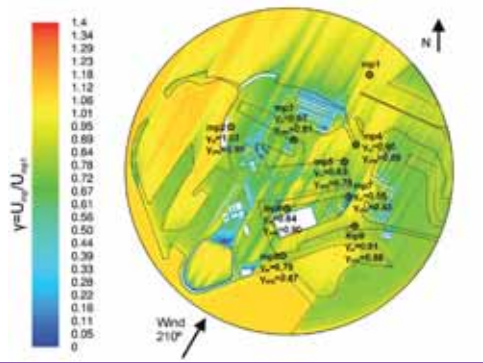

Figure 3: Result of CFD simulations for Port of Rotterdam: contours of normalised mean wind speed in horizontal plane at 15 metres above mean sea level (normalisation is performed using the wind speed at mp1)

From Janssen, Blocken, Van Wijhe, 2012

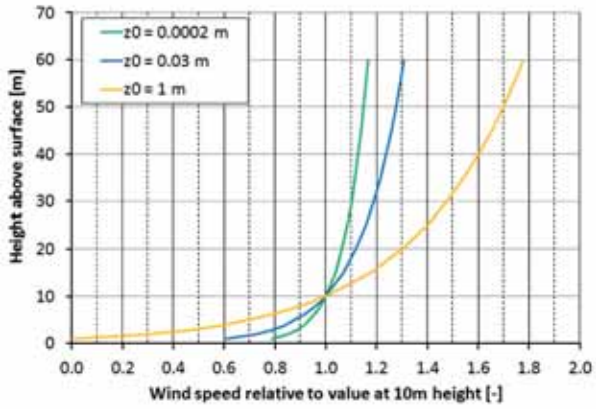

Figure 4: Logarithmic vertical wind profile for different surface roughness.

Figure 5: The Marco Polo virtually entering the Port of Rotterdam during recent simulations

Applying results of such calculated wind fields in combination with regular wind coefficients may on the other hand underestimate the actual wind load as the vertical wind speed profile in the port basin differs significantly from the profile on open sea or in the wind tunnel. This is illustrated in Figure 4, which shows the often applied logarithmic wind profile for different values of the surface roughness: open sea (0.0002 metres), grass land (0.03 metres) and villages (1.0 metres). It can be seen that the profiles are very different. This affects the wind load calculation, especially for the large container vessels for which the height to which containers are stacked on deck increases up to about 45 metres above the water level.

Accurately modelling the wind loads on the big 'whales' in manoeuvring simulations for port areas therefore still has some challenges.

- The spatial variation of the wind speed in the port area, for example, must be captured correctly. CFD calculations are a powerful tool as Figure 3 shows, but there are still questions regarding the most suitable way of modelling. Objects and buildings can be explicitly included in the 3D grid or the effect can be taken into account by just modifying the surface roughness.
- The variation of the vertical profile over the port area must also be taken into account when modelling the port. Both spatial and vertical variation depends on the wind direction.
- And the effect of both horizontal variations (bow in shelter, stern not) and vertical variations of the wind speed (wind profile) must be taken into account in the mathematical model of the ship.

These challenges are subject of the wind load joint industry project (JIP) initiative that has recently been launched by MARIN and a number of partners. With the results of this project, the participants will be able to determine the wind loads more accurately, so that the operating limits of the large container vessels can be determined more precisely. In this way the pressure which the growing ship size puts on the existing port and terminal infrastructure – where wind is often the predominant load factor on ships – will be predicted more accurately, thus taking away uncertainties on port operations by developing an optimised admission policy. With the improved modelling of wind and tug capabilities in waves the pilots and tug masters can also better train and optimise their strategy for catching the whales and bring them safely to shore.

The wind load JIP is open for participants. When interested contact Jos van Doorn

ABOUT THE AUTHOR

Jos T.M. van Doorn graduated in 1982 from Delft University of Technology in Naval Architecture (ship hydrodynamics). Following his graduation he worked for ten years as specialist in ship hydrodynamics at Delft Hydraulics on port and fairway design studies. In 1992 he started working at MSCN. He executed various ship manoeuvring studies for new ports, fairways, bridges and offshore facilities. Since 2005 he is manager of MSCN, the nautical centre of MARIN.

Johan Dekker graduated in 1985 from Delft University of Technology with a master degree in Civil Engineering. He worked for 18 years at Delft Hydraulics on hydraulic and nautical studies in the field of coastal, port and offshore engineering. Since 2007 he is project manager at MARIN's nautical centre MSCN involved in nautical studies for port studies and offshore operations.

ABOUT THE COMPANY

MARIN is an independent and innovative service provider, providing hydrodynamic and nautical research for the maritime industry. MARIN's nautical centre MSCN is specialized in nautical and safety studies, ship manoeuvring training and VTS training. Studies are executed for new port and fairway developments (sea going and inland waterways), entrance policies, design of new vessels and for offshore operations. Furthermore traffic and safety studies are executed for developments on the North Sea and for ports and terminals.

ENQUIRIES

Jos T.M. van Doorn / Johan Dekker
MARIN's nautical centre MSCN
P.O. Box 28, 6700 AA Wageningen
Tel: +31 317 493911
Email: mscn@marin.nl
Web: www.marin.nl

Powerful on the Seven Seas

An exceptional quality Uzmar Tug can safely handle the largest vessels.

UZMAR®
WORKBOAT AND TUG FACTORY

Uzmar Shipbuilding Industry and Trade Inc

Powerful in Nature

An ant can carry up to 50 times its own body weight and pull 30 times its weight.

info@uzmar.net
uzmar.com

Developing efficient marine fender solutions

Richard Hepworth, president, Trelleborg Marine Systems

Introduction

As vessels have grown larger and more diverse, so have the demands on fenders. A century ago, timber (first generation) was cheap and worked adequately for the small vessels of the day. Old tyres (second generation) were abundant and softer but required expensive maintenance and absorbed little energy. Cylindricals (third generation) were the first purpose designed fenders, gaining popularity over 50 years ago, but inefficient use of rubber and low performance by today's standards makes them costly. Arch and simple buckling fenders (fourth generation) had better performance and integrated the rubber with steel fixing plates.

Today, marine fenders have evolved to a fifth generation thanks to improved design, engineering expertise and advanced manufacturing capability. Marine facilities no longer need to 'make do' as the development of highly sophisticated computer-designed fenders is helping ports to make certain that both safety and efficiency are maximised.

Solutions per specification

Bringing a vessel into berth requires the vessel's kinetic energy to be absorbed or dissipated in order to prevent structural or vessel damage. The design and manufacture of fenders suitable for protecting modern ports and terminals, diverse vessels and high value cargo require a great deal of expertise and design engineering in order to optimise significant investment made, reduce downtime and maintenance needs as well as maximising the fender's lifecycle.

Fender systems are mission critical equipment and should be designed and engineered according to the functional and operational requirements of the specific project, as well as site conditions, environment and other design criteria such as local standards, desired service life, maintenance cost and frequency.

Suppliers should be fully engaged, not only in specification and design, but long after this stage, into the development of maintenance plans and audits for the equipment provided. Indeed, with a growing demand for offshore developments, as well as increasingly complex demands on onshore ports and terminals, it's becoming increasingly important that developments are considered holistically from the conceptual engineering stage.

Tailored solutions

There's really no such thing as an 'off-the-shelf' solution. As ports look to upgrade infrastructure to accommodate the demands placed on them, we're finding that people are increasingly looking for full service solutions, so the need for in-house design, engineering expertise and manufacturing is growing. With projects requiring in-depth engineering and application know-how and total fender solutions, we're also seeing more of a requirement to get involved in the design of accessory products that are complementary to the core fender system.

As an example, consider the growing market for floating storage and floating storage and regasification units (FSRU) and floating liquefied natural gas (FLNG) projects - it is critical that a short-term attitude, with low-cost procurement in mind and lifecycle maintenance planning of secondary importance, does not take hold. Safety and reliability over a long and arduous working life must be the key drivers. 'Off-the-shelf' solutions are not an option, as a customised maintenance package is required to minimise whole-life project costs. Maintenance is a core element in the achievement of optimised product performance and if maintenance costs are factored in to begin with, this will translate into long-term cost savings. It's now almost a case of reverse-engineering attitudes to ensure that increasingly complex onshore solutions are considered as holistically as offshore developments.

Compound considerations in rubber fenders

A variety of factors influence the specification of a fender system, such as local marine environment, exposure of harbour basins, class and configuration of vessels expected to berth against them, the speed and direction of vessel approach and the type of berthing structure.

There are a myriad of different types of rubber fenders and whilst it's relatively straightforward to identify their potential applications, what is more complex is determining the rubber compound and compound mixture required to absorb the kinetic energy the fenders will be required to accommodate.

The performance characteristics of the fender very much depend on the manufacturing process: compound formulation, the mixing of these rubber compounds, embedded steel surface preparation and building of the fender itself, through extrusion, wrapping or moulding. Correction factors applied to fenders are also determined, not only by a fender's geometry, but the rubber grade and compound used. So specifiers must have an understanding of the ways in which rubber type and grade affect performance.

The service life of a fender depends on the mechanical and physical properties of the rubber compound – usually, the higher the properties, the longer the service life. For example, it is accepted and proven that rubber compounds with a higher percentage of recycled rubber have lower mechanical properties than compounds made with virgin rubber.

Considering fender types

Again, all these principles mean that fender solutions must be determined on a project by project basis to optimise performance over the entire product lifecycle. However, broadly speaking, there are certain applications that particular fender types lend themselves to.

Arch fenders

Arch fenders provide uncomplicated reliability and trouble free service for a wide variety of berths, even under extreme conditions. There are two types of arch fender: the AN-fender,

which is a traditional rubber faced unit, and the ANP-fender, which can be fitted with UHMW-PE face pads or connected to a steel panel. The simple one piece design means this is a strong and hard-wearing fender with excellent shear performance. Applications include RoRo berths, general cargo, workboat harbours and barge and tug berths.

Roller fenders

Roller fenders are usually installed to guide ships in restricted spaces like between walls of dry docks. Roller fenders can also be used on corners and lock entrances where lower energies are needed. Roller fenders provide a very low maintenance option with good energy absorption and the flexibility of being used singly or in stacks.

Wheel fenders

Wheel fenders provide a particularly low maintenance option and, similarly to roller fenders, are widely used in marine environments with exposed corners, to help guide vessels into berths and along narrow channels such as locks and dry dock entrances. Like roller fenders, they can be used singly or in multiple stacks. In this system, the main axle slides on bearings and the wheels react against back rollers to provide high energy and minimal rolling resistance.

Parallel motion fenders

The technology behind parallel motion fenders can reduce reaction forces by up to 60 per cent compared with traditional designs. The panel on this marine fender always remains vertical but can cope with large berthing angles – even at 20 degrees there is usually no loss in energy absorption. Despite the engineering that goes into these fenders to ensure their ultra-low reaction, they require minimal maintenance and, as they are usually preassembled in the factory, can be installed quickly and easily. Thanks to the non-tilt frontal panel, there is no performance loss even at a large berthing angle. Applications include RoRo and fast ferry berths, LNG and tanker terminals, naval facilities, high tidal zones and monopile or 'soft' structures.

Berthing large vessels

Super cone fenders

Super cone fenders (SCN) are the latest generation of 'cell' fenders, with optimal performance and efficiency. The conical body shape makes the SCN very stable even at large compression angles, and provides excellent shear strength. With overload stops the super cone marine fender is even more resistant to over-compression. These fenders are broadly suitable for use in general cargo berths, bulk terminals, oil and LNG facilities, container berths and RoRo and cruise terminals.

SCK cell fenders

SCK cell fenders have a proven track record and remain a popular choice thanks to their simplicity, high performance and strength. They're also easily interchangeable with older cell fender types, so they can be used as replacements without the need to update an entire infrastructure. Again, there are a number of potential applications for this type of fender, so it's important to ensure that they're considered in line with the merits of the project. Broadly speaking though, applications include oil and LNG facilities, bulk terminals, offshore platforms, container berths and RoRo and cruise terminals.

Unit element fenders

The modular system of unit element fenders makes for a high performance option which is highly versatile, as they can be combined in unlimited combinations of length and direction. For more extreme applications, unit elements can be combined with a steel panel to cope with belting, bow flares, low hull pressures and high tides. They're easy to install, low maintenance and applications include container terminals, tanker berths, RoRo and cruise ships, dolphins and monopoles, bulk and cargo berths, fender walls and small craft berths.

Marine fenders have evolved to a fifth generation thanks to improved design, engineering expertise and advanced manufacturing capability

Modular fenders

Modular fenders are compression moulded and designed for a long service life and low maintenance.

MV-elements are the foundation of many marine fender systems. These modular units are compression moulded from a high performance polymer which resists attack from ultraviolet light, ozone and immersion in seawater for, making for a long service life and low maintenance. MV-elements are suitable for use with all vessel types which use fender piles, V-fenders, multiple fenders, pivot pillars and parallel motion fenders.

The MI-2000 fender systems suit very large vessels and high energy applications. They share the modular design concept with MV elements but with a modified fixing arrangement to allow greater deflections and efficiency.

The rubber unit is available in several standard lengths and rubber grades which, combined with the modularity of the MI system, provides designers with greater choice and versatility. They represent a high performance and efficient option which will provide a long, low maintenance life cycle. MI Systems are ideal for larger vessels including tankers and LNG ships, bulk carriers, post-Panamax containers and mega cruise ships.

Fender solutions should be determined on a project by project basis to optimise performance over the entire product lifecycle

The flexibility of pneumatic and foam fenders

Pneumatic fenders are known for their energy absorption, and have a low reaction force that makes them ideal for protection of LNG vessels, ocean platforms, floating structures, large docks and many load sensitive structures.

Puncturing pneumatics isn't a huge issue, but in the case that this does happen, they can be quite easily repaired (like an inner tube of a bicycle), making them a relatively low maintenance option. However, their internal pressure should be checked at regular intervals and the fenders topped up with air as required in order to maintain the correct operating pressure.

Foam fenders involve a construction technology centred on a close-cell polyurethane elastomer. Their closed cell structure means that they cannot puncture and so provide an 'unsinkable' alternative to pneumatic. Another benefit of foam fenders is that every cell is separate, so water cannot migrate into the foam; they also have high energy absorption for their reactive load. They're extremely resilient and after many years of service, the foam core can still be re-skinned and made ready for a new lease of life. They can be used for a wide variety of fendering applications and to berth a variety of ships, including cruise ships, container vessels, bulk cargo, RoRo and ferries, oil and gas tankers, general cargo, navy berths and ship-to-ship transfers. Foam fenders can also be deployed floating or dock mounted, this flexibility means they're an ideal option for temporary applications or those that require a fast turnaround time.

Both pneumatic and foam fenders provide an attractive option for rental, as a very cost-effective solution for temporary applications. Again, although rental is an effective flexible option – specifiers need to ensure they're getting the right quality and support, in order to avoid any costly incidents and subsequent downtime.

Conclusion

Despite the fact that it's possible to broadly identify which fender may be right for the job, it remains essential that each project and its specific requirements are considered. Not only should the optimum fender design be determined by a variety of factors, to maximise performance, lifecycle and efficiency of the fender, every detail down to rubber grade and compound must be determined per application.

ABOUT THE AUTHOR

Richard Hepworth is a Chartered Mechanical Engineer, having studied for his degree at the University of Manchester Institute of Science and Technology. He now holds the position of Business Unit President for Trelleborg Marine Systems, based in Singapore. Richard has over 20 years' experience working in the offshore and marine construction industry and has held a number of roles both within Trelleborg and within other large engineering companies in this sector, covering engineering, project management, sales, business development and general management.

ABOUT THE COMPANY

Trelleborg Marine Systems specialises in products and solutions for the safe berthing and mooring of ships within ports and harbours, on terminals and in waterways around the world. The company encompasses brands including Fentek, Seaward, Trellex and Harbour Marine. Trelleborg is a global industrial group whose leading positions are based on advanced polymer technology and in-depth applications know-how. Trelleborg develops high-performance solutions that seal, damp and protect in demanding industrial environments.

ENQUIRIES

Tel: +65 6265 6195
Fax: +65 62654149
Email: tms@trelleborg.com
Web: www.trelleborg.com/marine

Web-based solutions for port community systems

Christene Best, vice-president, sales and marketing, Klein Systems Group Ltd, Vancouver, Canada

Humans have been at sea for nearly as long as they've been walking on two legs. Archaeologists have found evidence of boats in Crete dating back 130,000 years. Ships are known to have existed since the Neolithic Age. Pilotage goes back at least to ancient Greek and Roman times. So it is not surprising that technology has been applied to seafaring since people first went to sea. The need for tools and aids to make navigation safer and more accurate has been inspiring inventors for millennia.

The progress of technology

Technology is so ubiquitous that we tend to take it for granted. However some of the things we rely on the most have not been around for all that long. Vessel traffic services (VTS) started around 1948. The term GPS or global positioning system was coined in 1973. STDMA data link patent, which is the basis for automatic identification systems (AIS), was published in 1997 and performance standards for AIS were adopted in 1998.

The massive, room-sized mainframes and storage devices that were developed after WWII have evolved into sleek, wireless, wafer-thin tablets and mobile phones that operate in 'the cloud', a term for high availability hosted solutions. The miniaturisation of computing technology, together with advances in communication and navigation technologies means that as ships get bigger and tougher to navigate, and environmental concerns become more pressing, there are more tools available for ports to use.

Developing port community systems

Today ports, pilots and maritime authorities can choose from many mobile, web-based applications with which to run their businesses. Still, some sectors of the maritime industry have not, when compared to other industries, been early adopters of new technology. Many ports still operate with legacy systems and manual processes, yet wish to define themselves as the hub of a modern port community system (PCS). Web-based technologies offer the technical infrastructure to do this. As more ports use technology to connect with their stakeholders, the concept of Port Community Systems becomes appealing and is, in some jurisdictions, being driven by laws or governmental policy. (See the article by Richard Morton in PTI 54).

Benefits and opportunities

In Europe, PCS is defined around the concept of having a single window for the input and sharing of electronic data, the benefits of which are obvious. Some ports simply use the concept of PCS to describe systems that give stakeholders access to the information they need. The web makes this possible. However, the web is not static. The next generation of internet tools and applications referred to as Web 2.0, may not have one universal definition, but if you've ever blogged, updated a wiki, checked KPIs on your mobile device or tagged a picture, you are already using it. The new web is no longer passive. It encourages active participation and interaction from users. Ports are making use of this to build more meaningful relationships with their stakeholders. It is no longer uncommon for ports to supplement their traditional communication channels with Twitter or Facebook.

However, even within a port community, there are different considerations that drive whether web-based solutions are appropriate. In the logistics sphere, the applicability of web-based solutions is clear. Consider a port community comprised of a port authority, agents, pilots and other service providers, terminal operators, customs, police, and the general public. The port provides web access to its various stakeholders, based on agreed business processes and user rights and privileges. For example, an agent can complete or update berth applications and service requests online and receive confirmation or questions from the harbourmaster the same way. The port police can see schedules and cargo manifests with their web view. The general public can check on ships in port and cruise line schedules from their mobile devices. Direct interface to customs can be deployed.

Considerations and challenges

There are few technological issues in enabling these solutions, even in situations where disparate systems need to interface to one another. The bigger challenge can be getting agreement between stakeholders on business rules and processes, particularly when the implementation of web-based solutions is part of an overall automation strategy. It would be unwise to underestimate the inevitable change management issues that will occur when the old way of doing something goes out the window. Human beings can be naturally conservative, particular when someone higher up tries to change how they do their jobs. Early

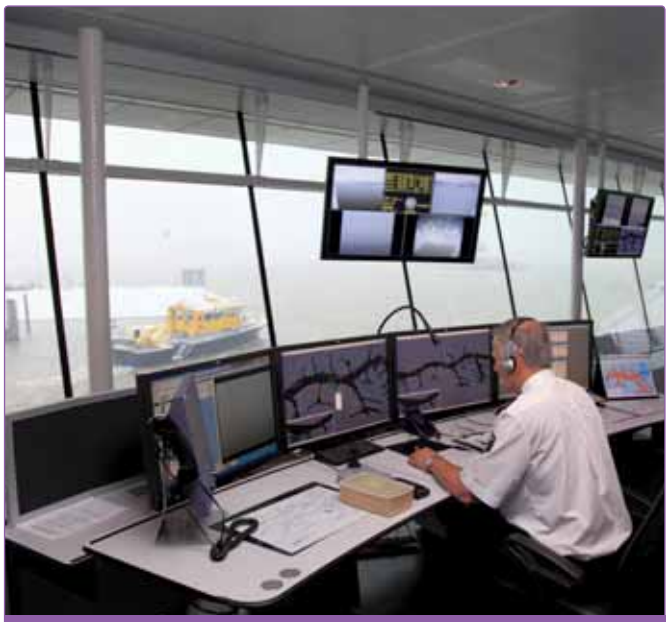

VTS operators always view the most current data

Port Community Stakeholders include service providers and customers

engagement of the people whose daily work lives will be affected by the application of technology is a critical success factor for any implementation.

Web solutions have their own challenges. If you have ever streamed a live TV show or downloaded a movie, you may have experienced lags or disruptions in the data stream. This is inherent in web-based systems where the source of information and its consumption are distributed around the globe. Multiple users can make simultaneous requests for the same information. The more users, the more work there is for server and the higher the possibility of delays in response.

Embracing efficient systems

When it comes to the domain of e-navigation such as VTS systems, these must ensure that the latency between information gathering and information display is minimal. Users need to know that they are always viewing the most current data. Every second lost between information gathering and information display could result in a multi-second delay when you factor in human response time. Three seconds may not sound like a lot, but if you are responsible for the safety of traffic in a busy marine area, it could mean the difference between a close call and having to fill in an incident report. VTS has to deal with real-time information. The International Association of Marine Aids to Navigation and Lighthouse Authorities (IALA) specifies the format for the exchange of data between VTS systems known as the Inter-VTS Exchange Format (IVEF) service to ensure protocol efficiency and minimal response times. Nevertheless, there are commercial web services that let subscribers view live AIS and traffic data. Ports can also offer such services with the additional advantage of showing filtered, validated AIS and radar data via the web. Web-based solutions allow accessibility wherever an internet connection exists, allowing ports to reach customers all over the world.

Technology as an enabler for improvements

Technology providers are constantly looking for ways to integrate disparate maritime technologies. Today what the VTS officer sees on his or her traffic board is not limited to just the radar and AIS information of a vessel. With the click of a mouse, an automatic link to the port's web-based community system places information about the ship, the cargo and the voyage on the VTS officer's screen. As the broader concept of PCS continues to evolve, we can expect to see web-based integration that will enable better sharing of information between ship and shore to improve situational awareness; access to dynamic under keel clearance (DUKC) system, fatigue and tidal window information for both planning and real-time operations and real-time sharing of information about violations, accidents and defects.

Whether your port is considering a comprehensive PCS with a single window, or a more modest approach that will allow stakeholders to have web-based access to relevant information, the technology exists to make it happen. Just keep in mind that technology is merely an enabler. The real pay-off comes from the conversations with the members of your port's community about how to drive quantifiable improvements in your collective business processes.

ABOUT THE AUTHOR

Christene Best has over 20 years of experience in sales, marketing and customer service in the technology field, with expertise in enterprise software and services, quality and business process improvement. She is vice-president, sales and marketing for Klein Systems Group Ltd and is based in Vancouver, Canada.

ABOUT THE COMPANY

Klein Systems Group Ltd, an international provider of maritime software solutions, is part of the HITT group of companies providing solutions for VTS, maritime community systems, navigation and hydrography. HITT is one of the creators of IVEF and recently joined the Saab group of companies, which has offices in 140 locations worldwide.

ENQUIRIES

Web: www.hitt.nl/marine

Customs and Security

"Ports are vulnerable to attack, whatever the target – whether cargoes, vessels or the infrastructure itself, they need a lot of protecting."

'Port security and the effect of piracy', page 88.

Port security and the effect of piracy

Steven Jones, maritime director, The Security Association for the Maritime Industry (SAMI)

Much of the recent maritime security focus has been on anti-piracy, and the problems off the Somali coast. The SAMI is a global focal point for maritime security matters. It sees that the impact of piracy on ports can be significant, and there are many knock-on effects of instability in an area, which can give rise to security concerns.

Already, there are ports which have felt a marked reduction in traffic around the areas affected by Somali pirates. Kenya appears to have suffered a drop in vessel traffic, but even where the traffic remains, there are potential problems.

Muscat, Oman appears to have become a popular port for pirates to target. There have been a number of attacks in which pirates have waited just out of port, attacking vessels at anchor and those heading into the port. While in the Yemen plans to expand the port of Aden have been affected by security concerns and redirected traffic.

Effects on countries and trade

Elsewhere others have voiced concern that piracy activities have severely affected trade and tourism sectors. The Tanzania People's Defence Forces has claimed that the flow of cargo ships at the Dar es Salaam Port has also been affected since pirates invaded the region in 2005. Data from the Tanzania Port Authority (TPA) shipping traffic department has highlighted a marked drop in vessels making port calls. Now of course global trade itself has changed since 2005, but with Africa considered a new hope for investment it seems that security has played almost as much a role in this drop as the global recession.

Even Somalia is being affected by piracy – although some feel that pirates have injected cash into the country, actually they have had an extremely negative effect on efforts to re-establish the country as a functioning state, and as a viable investment opportunity. According to local reports the pirate attacks have negatively affected business operations at Bosaso port, which has long been considered the commercial hub of the country.

Without a safe, secure and viable port it will be ever more difficult for the country to rise from the ashes of war, civil unrest and rampant criminality. In many ways ports can be seen as a window to a nation, reflecting the demands of the country and the products of its hinterland, also showing the wealth and power which a country and its populace can exert. Until traffic is able to move freely once more, free from the risk of attack, it will be difficult to see Somalia live up to its potential and it will seemingly be trapped in a downward spiral of terrorism, kidnapping, theft and piracy.

Further implications

Port operators around the continent have not idly stood by but have strongly and vociferously voiced their concerns. Back in 2010 the Executive Secretary of Pan African Association of Ports Cooperation (PAPC) termed piracy as "a cankerworm that grossly militates against the growth of ports' operations". It seems the ensuing years have done little to change this view.

The most obvious security issues have affected general and bulk cargoes, but the Somali piracy problem has also had a significant

Photo credit: SAMI

A merchant vessel typical of those sailing with private military and security companies (PMSCs)

effect on cruise traffic. This has been particularly damaging to East Africa, as countries such as Kenya and Tanzania see tourism as a tool to drive further investment and bring revenue into the countries. Having lawless bandits operating off the coast looking to attack cruise ships or grabbing tourists from the beaches is far from ideal for any country.

Then there is the issue of offshore exploration – it appears that the Somali basin is ripe for oil and gas exploration, however this is another major industry which is expressing concerns about the security risks in the region. Investing billions of dollars into a drilling programme, only to see it ruined by Somali pirates is not something which the oil majors can contemplate.

With many companies already facing violence, terrorism and crime on the west coast in the Gulf of Guinea, it will be interesting to see how their appetite for risk compels them to push forward in the Indian Ocean.

Other security issues

While so much focus has been on piracy, it does not paint a complete picture of the maritime security footprint, or of the full extent of the risks to people, vessels and cargoes.

Another major issue is that of general port security, which can involve stowaways and terrorism, but more usually relates to the issue of cargo theft. Such thefts can be done using clever or brute force approaches and ports can be attractive hotbeds of criminal activity, with some cargoes actually arriving into a port having already been stolen.

Those that arrive legitimately may also be under threat. For all the sophisticated fences, lighting, alarms and number plate recognition systems (NPRS), there is still room today for cunning thieves, violent bandits and opportunists.

As an example of where investment can be misguided, one UK port reportedly spent heavily on a state of the art NPRS only to find, when trying to identify a stolen cargo, that if an incoming wagon arrived at the same time as one was outbound then one obscured the other from the camera. So the CCTV footage of the perpetrator was completely useless. However, rather than the trailer of cigarettes which they suspect the criminals had targeted, they had actually got away with over 2,000 disabled toilet seats.

Other recent examples of cargo theft involve the old favourite, 'the inside job'. When a driver was held at knife point and forced to drive his own wagon for the criminals, there was sympathy all around – until it was made known the driver had pulled the same stunt at a different port a year before.

Addressing the issues

Ports are vulnerable to attack, whatever the target – whether cargoes, vessels or the infrastructure itself, they need a lot of protecting. They obviously vary, there is no such thing as a standard port, but there are security lessons which can be learned and applied.

A very simple question would be: what are ports doing to protect themselves from pirates? The answers are not quite as straightforward as one might think. Piracy, regardless of the legal definition, can often be thought of as a 'tropical disease' as the vast majority of global attacks occur within the Tropics of Cancer and Capricorn, and there are perhaps many obvious economic, sociological and meteorological reasons for this.

What this means is that the same ports are targeted by pirates year in, year out. The reports of the International Maritime Bureau (IMB) almost routinely feature a range of attacks in ports around the world, with those in Bangladesh seemingly particularly violent and prone to opportunistic grabs of cargo or valuables. So what is being done, and what can be done? For the most modern ports there is the economic drive to ensure that they are secure, and in order to be considered for schemes such as the US Container Security Initiative (CSI) they have to have the systems, processes, people and equipment in place to safeguard their security integrity. These ports invest heavily in security including the purchase of fencing, lighting, intruder detection and security expertise.

Photo credit: SAMI

A privately contracted armed security guard performing operations in the High Risk Area (HRA)

Photo credit: SAMI

Passage planning through the HRA

Photo credit: SAMI

Razor wire is used as part of a layered defence system against pirate attack

Difficulties in protecting ports

Sadly, beyond the facilities which do invest in and manage their security, it would appear that all too many ports are not doing enough to protect themselves and it has proven extremely difficult to secure themselves against pirates and opportunist robbers.

For so many ports it seemed that they were almost too complex, ramshackle or difficult to secure, and so in many respects, the International Ship and Port Facility Security (ISPS) Code approach of breaking down ports into their composite facility elements has been a good starting point. The port which spans miles of river, the inner city port, the vast container terminal and the offshore loading jetty –are all broken into more uniform elements which are easy to view, manage and sanitise. However it is often away from the ISPS designated port facilities where the security breaches occur.

Rises and repercussions

Freight Watch International reported an 8.3 per cent increase in the number of cargo thefts last year, while CargoNet recorded a 17 per cent increase in reported annual cargo theft incidents at the close of 2011. These are significant leaps, and should be raising a number of flags as a port which loses cargo, is a port with serious security deficiencies.

While India and many major ports in Asia are seen as comparatively secure, what they more often experience is opportunistic theft. Criminals are able to take advantage of isolated trucks or loads left unattended. A unitised load already packed and ready to go is by far the easiest cargo to steal; the old adage that 'cargo at rest is cargo at risk' applies as much today, as it ever has.

However, there are also reports that sophisticated gangs are beginning to increasingly target ports. It may seem like a movie plot, but the 'Goodfellas' type crime syndicates are still involved in cargo theft – only recently a New Jersey-based mafia crew and a warehouse owner were convicted in the US on charges of dealing in stolen cargoes. There is an increasing concern that organised crime is infiltrating ports far and wide, across the globe.

It may not always be the actual acts of crime or violence which deliver the killer blow for a port, there are also the knock-on effects of insurance increases. When the tanker – Limburg was attacked by al-Qaida in 2002 off the Yemen, the ensuing hike in insurance premiums made it almost impossible for the port to operate. In essence the entire port had been brought to its knees by decisions of underwriters in London.

Although the attack on the Limburg only resulted in one death, it caused insurance rates of Yemeni shippers to rise 300 per cent and cut Yemeni port shipping volumes by 50 per cent for a month after the attack. Consequently, the attack caused the short-term collapse of shipping in the Gulf of Aden, ultimately costing Yemen to lose $3.8 million a month in port revenues.

Continual work ongoing

When economic times are hard, there is usually an upswing in crime – and with that in mind port operators are working hard to police their terminals, to protect their cargoes and preserve their reputations.

ABOUT THE AUTHOR

Steven Jones is the Maritime Director of The Security Association for the Maritime Industry (SAMI), he spent a decade working as a navigation officer in the merchant navy and was attacked by pirates while serving. After shifting ashore he advised numerous shipping companies on security planning - spending years researching, applying and developing an in-depth knowledge of security and the International Ship and Port Facility Security (ISPS) Code and anti-piracy measures.

He has had a number of works on shipping and maritime security published, and is a regular industry commentator. His latest publication is Maritime Security – a Practical Guide, with a foreword by the International Maritime Organization Secretary General Emeritus, Mr Mitropoulos.

He has worked across the maritime industry, within shipping companies, insurers, publishers and professional bodies and was the founder of the International Dynamic Positioning Operators Association (IDPOA). He is a Member of the Nautical Institute and a Fellow of the Royal Society of Arts.

Steven has a BSc (Hons) in Maritime Studies, and MSc in Marketing, Communications & PR from the University of Chester, UK – with a focus on crisis communications and reputation management within the shipping industry.

ABOUT THE ORGANISATION

The Security Association for the Maritime Industry (SAMI) is an international organisation representing private companies and serves as a focal point for global maritime security matters. The international membership encompasses over 180 maritime security providers, consultants, trainers and maritime security equipment, technology and hardware manufacturers from across 35 different nations. SAMI provides direct links to the commercial maritime industry, working in partnership with international organisations, flag States, governments and regulatory bodies, insurance and legal professionals, SAMI bridges the gap between security and shipping. The Association is at the forefront of issues affecting a range of stakeholders and specialises in developing guidance, documentation, education, training and innovative technological solutions.

ENQUIRIES

Tel: +44 (0)207 788 9505
Enquiries: enquiries@seasecurity.org
Web: www.seasecurity.org

Evolving TWIC program explained

Question and answer with **John Schwartz**, Transportation Worker Identification Credential program manager

The Transportation Worker Identification Credential (TWIC) biometric credential is a U.S. Department of Homeland Security (DHS) initiative to ensure only vetted workers gain unescorted access to secure areas of a port or vessel regulated by the Maritime Transportation Security Act. To obtain a TWIC, individuals provide biographic and biometric information such as fingerprints, are photographed, and must pass a security threat assessment conducted by the Transportation Security Administration (TSA).

A chip embedded in the credential card stores data which can be read by insertion or contactless readers. The photo identification card also contains a magnetic strip and a linear barcode as alternative reading methods. This Q & A with Jon Schwartz, Transportation Worker Identification Credential program manager for the Transportation Security Administration, provides responses to important questions faced by future credential candidates and the more than 2 million people already enrolled in the program.

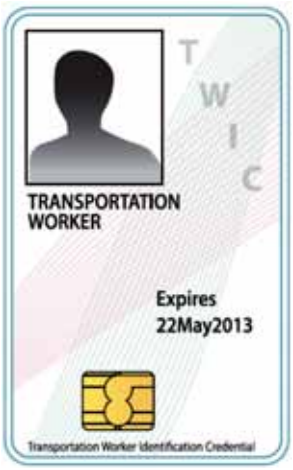

A sample biometric Twic® card

There is a new contractor for TWIC enrolment, how will that impact the renewal process for a TWIC and when will this change occur?

TSA selected a Universal Enrolment Services (UES) provider to take over expiring enrolment contracts, including TWIC. This provider will establish new enrolment sites, largely in the same geographic areas, and will begin transitioning responsibility early next year. TSA anticipates a 50 percent increase in the number of enrolment centres, which should facilitate applications.

There have been reported problems with TWIC card antennas being broken, can you report what TSA has done to address this problem?

Some TWIC cards can be impacted by normal wear and tear, temperature and humidity, and use. Future action will be determined, as necessary.

Many ports offered mobile enrolment centres and used bulk payments for TWICs. What process should they follow if they want to do this again during the enrolment period? How should this be timed?

During the transition period to UES, the contractor (Lockheed Martin) is offering mobile enrolment and activation services to companies or entities interested in receiving (and able to fund) on-site TWIC services and bulk payment options. This applies to initial or card renewal enrolments as well as for obtaining extended expiration date (EED) TWICs.

What is the difference between renewing cards the normal way and using the three-year extended expiration date TWIC? Why might a worker want to get one or the other?

The three-year EED TWIC, at a reduced fee of $60.00, is offered because the Final Rule has not been promulgated for TWIC card readers. The EED TWIC will be accepted by the U.S. Coast Guard, port and vessel operators. It is a one-time temporary extension of the current card; upon expiration, all EED TWIC holders will be required to enrol for a standard five-year TWIC. Those TWIC holders who are not U.S. citizens or U.S. nationals or who do not wish to use the EED TWIC option now, may renew their expiring TWICs with a five-year card, at an

Which agency is responsible for the final TWIC reader rule (TSA or U.S. Coast Guard) and what is the timeline for those regulations?

The TWIC reader regulation is a DHS-wide priority and the Coast Guard is responsible for the TWIC reader rulemaking. The Coast Guard intends to publish a Notice of Proposed Rulemaking, to consider the findings of the TWIC reader pilot program and to and readers deployed at the facilities with the highest risk within three years.

If a port wants to buy TWIC readers before the final rule goes into effect, are there guidelines for which readers to buy? What is TSA's long-term plan to approve readers?

TSA maintains a list of readers that initially provided guidance


Checking TWIC card with UV flashlight

PORT TECHNOLOGY INTERNATIONAL

SUBSCRIBE TO PORT TECHNOLOGY INTERNATIONAL

- The quarterly technology journal for ports, harbours and terminals
- Exclusive analysis on emerging technologies from leading industry experts
- Online access to over 700 technical articles from the journal archives

Simply complete and return the form below by fax or post, or email us at **info@porttechnology.org**

1- Fax this form: +44 (0) 20 7871 0101
2- Post this form: Port Technology International, Trans-World House, 100 City Road, London EC1Y 2BP, UK
3- Telephone: +44 (0) 20 7871 0123
4- Email: info@porttechnology.org

I would like to receive the following copies of Port Technology International

4 editions (1 year):	**USD $250** ❑	**EUR €200** ❑	**GBP £150** ❑
8 editions (2 years):	**USD $450** ❑	**EUR €360** ❑	**GBP £270** ❑

Back issues can be ordered for USD $55 / EUR €45 / GBP £35 per issue. Please call or email for more details.

Your details / delivery address

Name:_____ Job Title:_____
Company/Port/Organisation:_____
Full Address:_____
_____
Zip/Post Code:_____ Country:_____
Telephone Number:_____ Fax Number:_____
E-mail:_____ Web URL:_____
For the purposes of our circulation audit, please write your city of birth:_____

Payment details

❑ Payment enclosed (please make International money order/cheques payable to Maritime Information Services Ltd.)

❑ Bank transfer completed
Account Name: Maritime Information Services Limited; Account Number: 40765155; Sort Code: 20-39-53;
Swift Code: BARC GB 22; IBAN Number: GB 78 BARC 203953 40765155;
Bank: Barclays Bank Plc, 10 Hart Street, Henley-on-Thames, Oxon, RG9 2AX.

❑ Please charge my credit card
❑ Visa ❑ Amex ❑ Mastercard

VISA MasterCard AMERICAN EXPRESS

Card holder's name:_____
Card number:_____
Last 3 digits on the back of the card:_____
Expiry date:_____
Card holder's full postal address:_____

If you do NOT want to receive our free weekly e-newsletter tick here ❑
If you do NOT want to receive our free daily email news alerts tick here ❑

Signature_____ **Date**_____

to facility and vessel operators participating in the TWIC reader pilot. This Initial Capabilities Evaluation (ICE) list may still be used to guide operators in making reader decisions now. However, by the end of this year, TSA expects to replace the ICE list with a new Qualified Technology List of card readers certified under the future TWIC reader rule.

If a worker was required to get a waiver last time, will the renewed TWIC require the same paperwork? What is the time frame for that process?

No. If an applicant is renewing for a five-year TWIC, waiver documentation will only be required if new disqualifying or potentially disqualifying activity is identified. All previous offenses on which a waiver was granted would not require re-submission. If a waiver is required, an applicant should expect to receive a letter with details surrounding the offense and further instructions within 30 days.

Can a corporate personnel department apply for TWICs on behalf of co-workers, if appropriate information is provided?

A company can provide a list of employees who are eligible for EED TWICs, along with a bulk payment, to the TWIC contractor and have the card orders processed on behalf of the employees. Each employee would then complete the in-person activation and issuance process. A company cannot apply for an initial or full renewal card on behalf of their employees since new personal data, fingerprints and photograph are necessary.

Why can't the TWIC card be sent by mail like other documents such as passports and drivers licenses? Is TSA considering changing the process in the future?

The primary purpose served by the second visit to an enrolment centre to pick up and activate a TWIC is to prevent fraudulent activation and security risk of having someone else use the card to access secure areas and facilities. TSA and U.S. Coast Guard believe that this could be accomplished through alternative means and are reviewing options.

This interview first appeared in the Winter 2012-13 issue of the American Association of Port Authorities' Seaports Magazine. http://www.aapaseaports.com/pdf_issues/AAPASeaports_Winter2012-13.pdf

ABOUT THE INTERVIEWEE

John Schwartz is the Transportation Worker Identification Credential program manager for the Transportation Security Administration. Prior to joining in 2003, he served 30 years as a commissioned officer in the U.S. Coast Guard, retiring at the rank of captain. Mr. Schwartz holds an undergraduate engineering degree from the U.S. Coast Guard Academy and graduate degrees from The American University in Public Administration, and the Naval War College in National Security and Strategic Studies.

ABOUT THE ORGANISATION

Founded in 1912, the **American Association of Port Authorities** is a trade association which represents more than 130 public port authorities in the United States, Canada, the Caribbean and Latin America. In addition, Association members include more than 300 sustaining and associate members -- firms and individuals with an interest in the seaports of the Western Hemisphere. AAPA is dedicated to serving deep draft public ports by enhancing port management professionalism, and advocating issues critical to public seaports.

Busan

Northeast Asia's new transhipment hub

The Port of Busan has nearly trebled its capacity over the past decade to become the fifth busiest container port in the world, and the port's rapid expansion and continued development is showing little sign of slowing down. Lim Ki-tack, the president of the Busan Port Authority, explains to Port Technology International how the South Korean port has fast become the hub port of Northeast Asia.

It has been nearly a decade since the Busan Port Authority was restructured to become a public corporation, how much of an impact do you feel this has had on the development of the port?

Since the inauguration of Busan Port Authority (BPA), there have been made significant developments and improvements in Busan Port. At first, in the rapidly evolving environment of ports and logistics industries, BPA has reacted against the fierce competition in an aggressive and speedy manner. BPA has made the utmost efforts to enhance Busan Port's productivity and efficiency by constructing state-of-the art new container terminals and modernising port facilities. That's why the container cargo handling capacity increased by 15 million TEU in 2012 from 6.7million TEU in 2004. Together with the productivity increase per berth, carriers' weekly services at Busan Port have been increased from 217 calls in 2004 to 358 in 2012.

BPA has also strengthened its PR and marketing activities to promote the current status of Busan Port and to attract more cargo and logistics companies. By the end of 2012, in the case of tenants at the distripark at Busan New Port, 30 logistics consortiums from home and abroad operate at the facility, creating more than 611,000 TEU cargo and 1,300 of new jobs. With this, BPA has developed Busan Port into the hub port of Northeast Asia, contributing to the local economic development of South Korea as well as strengthening national competitiveness.

Busan Port recorded the highest growth rate of any of the top 10 global container ports in 2011. How did the port fair in 2012?

The global economic downturn in 2012 hindered Busan Port's growth. Busan Port handled an estimated 17.02 million TEU, up 5.2 percent from the year before. Among the figures, Transhipment cargo increased 10.5 percent to 8.13 million TEU, while on the other hand, local cargo showed exceptionally slow growth, with only a 1.1 percent increase from the year before. The growth of transhipment cargo was the driving force behind Busan Port maintaining its position as the world's fifth busiest container port. This was also helped by BPA's proactive marketing efforts toward global carriers. BPA has implemented various measures to attract transhipment cargo since 2004.

Busan New Port is scheduled to be fully completed in 2019. How is the project coming along?

As of now, 23 berths including one multi-purpose and one Ro-Ro berth are under operation in Busan New Port with annual handling capacity estimated at 9.44 million TEU. Six terminal operators are running these 23 berths, with eight more container berths scheduled to be constructed by 2019. According to the National Third Port Development Plan released in July 2011, Busan New Port will have a total 45 berths in the future, although since this announcement a further 15 berths have been added to the original plans.

With the continued expansion of Busan's New Port are there plans in place to enhance transhipment links to North Port terminals?

In terms of transhipment cargo, cost and time is the most important factors. That's why, in order to provide more convenience and speedy transportation of transhipment cargo between New Port and North Port, BPA has provided subsidies for carriers, transporting transhipment cargo by truck between two ports. Also, BPA has provided financial support to the domestic carriers, transporting other carriers' transhipment cargo between New Port and North Port.

BNCT Co. Ltd. (Busan New Container Terminal), Busan Port, South Korea

Credit: The Busan Port Authority (BPA)

In 2012, Busan Port's BNCT became Asia's first vertically automated terminal. Is the idea of fully automated terminals a concept that the BPA would encourage in Busan?

The first vertical-automated terminal in Asia was designed to be one of the most advanced container facilities. It is seen as the Asian 'blueprint' for other operators in their search for automated container yards. We believe that the automation at the terminal is indispensable to increase port's productivity in this fierce competition among mega ports.

In the case of BNCT, a privately invested terminal, the operator chose the automation system to increase its competitiveness by itself.

Busan Port prides itself as being Northeast Asia's logistical hub. What competitive edge do you feel Busan has over its neighbours?

We believe that Busan Port has five competitive edges over its neighbouring ports. Firstly, Busan Port boasts a strategic geographical location being located on the main trunk route, connecting Asia to both Americas and Europe. Second, the sophisticated feeder network is fully enough to efficiently transport cargo to and from Japan, China and Russia. Third is the excellent connectivity. As of December 2012, 358 weekly services are available from Busan to ports throughout the world, showing how Busan is now a globally connected port. Fourth is deep water. Busan Port is capable of accommodating the world's largest vessels with a current depth of 15 metres and plans in place to increase this to 17 metres from 2017. Finally we have our favourable weather, as we have less fog and fewer storms compared to out competitors helping us to minimise port closure.

How will the Panama expansion affect the Port of Busan?

Busan Port has keen interests in the Panama Canal expansion. When it comes to US bound cargo, particularly to the East Coast of US and South America bound cargo; Busan Port has played a pivotal role on theses routes as the last port of call. Considering the dramatic increase of trade volume between Northeast Asia and the Americas, the Panama expansion will make carriers deploy bigger vessels on these routes, which I believe will bring more cargo to Busan Port.

Finally, the BPA recently signed a MoU with PSA International. What do you hope to gain from the agreement?

The BPA and PSA International agreed to share knowledge and techniques on port development, management and operation. In addition, BPA and PSA International are going to exchange information and ideas to improve their mutual capabilities. Furthermore, both parties agreed to organise regular staff visits to broaden exposure and enhance learning. As you may know, there has been a decline in maritime traffic at global ports and they have faced further difficulties caused by the global economic downturn. However, BPA and PSA International will work together and wisely attend to those matters by exchanging their experience and expertise. I firmly believe that this MoU will serve as a stepping stone to mutual success and development.

Our Partners in Publishing

PORT TECHNOLOGY INTERNATIONAL

International Association of Marine Aids to Navigation and Lighthouse Authorities (IALA-AISM) gathers together marine aids to navigation authorities, manufacturers and consultants from all parts of the world and offers them the opportunity to compare their experiences and achievements.
www.iala-aism.org

International Association of Airport and Seaport Police- InterPortPolice is a worldwide, non-governmental and non-profit association dedicated to mutual cooperation in setting the highest standards of safety, security and law enforcement regarding the transportation of persons and property through air and seaports, across boundaries and other terminals.
www.interportpolice.org

The World Customs Organization (WCO) is the global centre of customs expertise and research, with a primary mission to enhance the effectiveness and efficiency of customs administrations. It is an ideal forum for the organization's 177 members, who collectively process over 98 percent of world trade, to exchange experiences and share best practices on a range of international customs and trade issues.
www.wcoomd.org

The International Maritime Pilots Association is a forum for the exchange of information. Its main objective is to provide a representative voice for pilots in international maritime forums, particularly at the International Maritime Organisation (IMO), an agency of the United Nations, and the International Maritime Law-Making Body.
www.impahq.org

ICHCA International speaks for cargo handling interests at an international level and consults, informs and advises its members accordingly. It has a worldwide membership and is a recognised Non-Governmental Organisation (NGO) with ILO, IMO, ISO and UNCTAD.
www.ichca.com

AIM is the global trade association for automatic identification and mobility technologies. As a not-for-profit industry organization, AIM's mission is to stimulate the understanding and use of the technology by providing timely, unbiased and commercial-free information.
info@aimglobal.org • www.aimglobal.org • www.rfid.org

International Harbour Masters' Association (IHMA) promotes safe, efficient and secure marine operations in port waters and represents the professional standing, interests and views of harbour masters internationally, regionally and nationally.
www.harbourmaster.org

The Coasts, Oceans, Ports and Rivers Institute (COPRI) works to advance and disseminate scientific and engineering knowledge to its diverse membership, which is engaged in sustainable development and the protection of coasts, oceans, ports, waterways, rivers and wetlands. COPRI works to enhance communication and cooperation among more than 3,000 members, both domestic and abroad, and the industry as a whole by advancing members' careers, stimulating technological advancement and improving professional practice.
www.coprinstitute.org

CEDA promote the exchange of knowledge in all fields concerned with dredging. They enhance contacts between the various groups from which members are drawn and between the dredging fraternity and the rest of the world, enhancing understanding of dredging works from both theoretical and practical viewpoints.
www.dredging.org

The International Association of Dredging Companies (IADC) is a trade organization with more than 50 main and associated members in the private dredging sector, all of which operate sizeable fleets and are active in the world market. IADC works to attract worldwide recognition for the dredging industry in general and to increase the public's awareness of the significant contributions of dredging towards economic growth and prosperity.
www.iadc-dredging.com

The International Association of Ports and Harbors (IAPH) is a worldwide association of port authorities, whose principle objective is to develop and foster good relations and cooperation by promoting greater efficiency of all ports and harbors through the exchange of information about new techniques and technology, relating to port development, organisation, administration and management.
www.iaphworldports.org

The Ports and Terminals Group (PTG) is the UK's leading ports trade association. PTG's mission is to help facilitate its members' entry into, or growth of their businesses in, overseas markets; and in doing so assist port organizations and governmental authorities worldwide to undertake port development and expansion on a build-operate-transfer or similar basis.

Supporter companies

APM TERMINALS Lifting Global Trade.. DP WORLD

Port Technology International is supported by leading terminal operator networks, including APM Terminals and DP World.
APM Terminals is an independent business unit and operates a global port and terminal network of 50 facilities with 22,000 employees in 34 countries.
DP World is one of the largest marine terminal operators in the world, with 49 terminals across 31 countries.

Advertisers Index

Van Oord

Marine ingenuity

Marine ingenuity

Van Oord is a leading international contractor specialising in dredging, marine engineering and offshore projects (oil, gas and wind). Our clients and business partners can rely on Van Oord to come up with smart and innovative solutions to the challenges they face in marine environments. We are driven by our passion for water and technology and applying our ingenuity to achieve the best and most sustainable results. www.vanoord.com

Dredging and Marine Contractors

Offshore

Marine Engineering

Offshore Wind Projects

Soil Improvement

Dry Infrastructure